Wis. Dells Business Improvement District (BID) Committee Meeting Agenda

Wednesday, July 10, 2019 at 8:30AM

Wisconsin Dells Municipal Building Council Chambers – 300 La Crosse Street – Wisconsin Dells

Members: Tara Anchor-Chair, Ald. Jesse DeFosse-Vice Chair, Mark Sweet-Secretary
Justin Draper, Dan Gavinski, Adam Makowski, Jackie Morse, Kevin Ricks, Kyler Royston

---

1. Call to Order
2. Approval of the June 19, 2019 Meeting Minutes (attachment)
3. Introduction of Guests at Meeting
4. Discussion/Decision - Illinois Avenue Street Banners — Tara
5. Discussion/Decision – Broken Street Banners on East Side of City — Tara
6. Discussion – Billboard Artwork – I90 Sign at Lodi — Tara
7. Update on Summer Entertainment and Lot — Jenifer
8. Update/Discussion - Riverwalk Anchor Project (attachment) — Tara
9. Recap of July 4th Events — Kyler/Jesse
10. Discussion/Decision – Lobbyist/Grant Writer – Ideas for River Trail System — Dan
11. 2019 Budget Review to-date — Tara
12. Brief Updates if Time Allows: — Tara
    a. Elm Street Project – Please attend July 11th meeting to show support
    b. Downtown Lighting
    c. Drinker's Landing
    d. Ice Castle
    e. Joe Leute 's Soul of the River Project
    f. La Crosse Street Hill – Thad/Kevin
13. Next Meeting – Wednesday, July 25, 2019
14. Adjournment

The Committee may take action on any of the above listed agenda items.

Tara Anchor, Chairperson - Agenda Posted & Distributed: July 5, 2019

Open Meetings Notice: If this meeting is attended by members of the Common Council who are not members of this committee, their attendance may create a quorum of another city commission, board or committee under the Wisconsin Open Meetings Law; However, no formal action will be taken by any governmental body at the above stated meeting other than the body, committee, commission, or board identified in this meeting notice. Please be advised that upon reasonable notice, the City of Wisconsin Dells will furnish appropriate auxiliary aids and services to afford individuals with disabilities an equal opportunity to participate in meeting activities.

ITEM 2

BID Committee
June 19, 2019

Attending: Tara Anchor; chairwoman
Kevin Ricks; BID
Justin Draper; BID
Adam Makowski; BID
Dan Gavinski; BID
Mark Sweet; BID
Mayor Ed Wojnicz
Chris Tollaksen; Public Works
Jenifer Dobbs; WDVCB
Brian Holzem
Jenna Loda Eddy
Tom Turbett
Corena Ricks
Thad Meister

Meeting called to order by Tara Anchor; chairwoman.
Motion to approve June 5 minutes made by Justin Draper. Second by Adam Makowski. Approved.

ENTERTAINMENT LOT IMPROVEMENTS:
Infrastructure and furnishings as well as the stage are in place at Cedar and Broadway for the start of the regular nightly summer entertainment program. Jenifer Dobbs estimated total expenses at about $2500 to cover the improvements made.

ILLINOIS AVENUE BANNERS:
Tom Turbett from Rainbow Signs estimated the cost per street banner would be less than $150 based on the size available on the arm post. He is awaiting artwork from Joe Leute. As the cost is less than the $1600 donation made by the Rotary Club, a suggestion was made to have a plaque made to recognize the Rotary contribution and to have a bench placed somewhere by the bridge. Chris Tollaksen will get prices for the bench.
Chris and Tom both noted that several of the pole arms which hold the banners were damaged. Those poles are mostly on the 600 Broadway block. Cost of replacement needs o be finalized for any decision to be made.

BILLBOARD ARTWORK / I-90 LODI EXIT:
Artwork is coming off the billboard structure and needs immediate replacement. The billboard measures 8' x 18'. Tom Turbett said the sign would cost $2650. DOT regulations are clear that these signs should only be directional in nature. Artwork was reviewed with consensus being to continue with the current design and change to "Dells River Arts District" from the previous "Dells River District."
Dan Gavinski made a motion to approve the expenditure of $2650 to replace the artwork on the Lodi Exit on I-90. Second by Justin Draper. Approved unanimously.

RIVER WALK ANCHOR:
City Treasurer Karen Terry has suggested that BID work directly with Michael's Signs to get an estimate to do the introductory vignette and base for the boat anchor display. As much of the preliminary study work has been completed, it was felt having MSA involvement in this project would be an unnecessary expense. It will cost $3800 to complete the engineering survey of the River Walk bridge. Karen will contact Michael's Signs to get an estimate for the vignette and also determine if they are able to do the work on the base. Action on completion of the engineering survey will await review of the estimate from Michael's Signs. Dan Gavinski and Tara Anchor will measure the entrance area to help consider where the vignette/ anchor display may be best positioned to allow for maintenance vehicles.

JULY 4th FIREWORKS VIEWING:

Use of the municipal parking lot for viewing the fireworks has not been ruled out due to the construction project. Though both alternative areas for viewing are available, it was felt that the public will figure out where to go to see the fireworks and that additional directional signage will not be needed.

RAILROAD BRIDGE / WEST RIVER DEVELOPMENT:
It was felt that parties who might be involved with development of the west side of the river need to see the connection to the downtown via a pedestrian walkway over the river. That connection would be key to that usage being successful. Before other alternatives are seriously discussed, it was felt that BID should exhaust all options to work with Canadian Pacific Railroad for use of the bridge. Dan Gavinski will speak with a person who might be able to serve as a lobbyist to help move opinions at the highest levels in the Canadian Pacific organization. City Clerk Nancy Holzem has communication from Canadian Pacific which specifies their demands for use of their bridge. Nancy will be contacted so BID can have a copy of that list. Discussion of a trailways system was tabled indefinitely until a pedestrian connection is finalized.

ELM STREET COMMONS AREA:
Kevin Ricks reported that an agreement between Concept Attractions and the Gussel family has been reached for purchase of the Chalet complex including the Bavarian Village.
The agreement will move forward pending approval and commitment of the City to the closure of Elm Street next to the Chalet for use as a public commons / plaza area. That area would be operated as a city entity. Discussions continue as to how this will be paid for and a timetable for when it might happen. Mayor Wojnicz reported that the City Planning Committee will hold a meeting on July 11th at 5PM when the public will be able to voice opinions about the Chalet sale, closure of Elm Street and turnover of City Lot 2 to Concept Attractions.
Kevin and Corena Ricks are finalizing three design proposals of the Elm Street Commons area for BID and public review. Those proposals should be available for review at the July 10th meeting.

SOUL OF THE RIVER PROJECT:
Joe Leute continues to discuss with a number of parties where to locate the "Soul of the River" photography display which will showcase the people who were part of the Dells history with the Wisconsin River. The project is 100% privately funded. A location is the current roadblock for the project to advance. BID will continue to be updated on this project. Joe plans to seek City Council endorsement for the project.

JULY 10th AGENDA: Items for the July 10th meeting will include updates on the River Walk Anchor display, Illinois Avenue bridge banners, Railroad Bridge possible lobby efforts, Elm Street Commons designs and other items to be determined.

Motion to adjourn made by Adam Makowski. Second by Kevin Ricks. Approved.

ITEM 8

Riverwalk Anchor Project Discussion Points

Estimate:

○ Production -	$26,070	Michael Signs
○ Finalization of design	$ 2,400	Zebradog
○ Engineering study on bridget	$ 3,800	(Chris Tollaksen has contact)
○ Anchor refurbishment	$ 4,000	Dave Hall
Total:	$36,270	

Note: Caroline at Zebradog feels strongly that the engineering work should be done first. This could create a slight change in design, and/or production and/or Dave Hall's estimate depending on how the base needs to be built and how the anchor gets attached.

Placement:

Plenty of room for vignette at front of entrance. It will fit nicely in front of the glass blocks, set to the left so that it doesn't block the gateway arch. The bridge itself is 10' wide (tractor needs 7'). The area Dan and I looked at where the vignette would go is 20+ feet wide.

PROPOSAL & PURCHASE AGREEMENT

Michael's Signs, Inc.
3914 S. Memorial Drive
Racine, WI 53403
P: 262.554.6066
F: 262.554.0574

Date:	June 27, 2019
Expires:	August 26, 2019
Sales Rep:	Chris Henkes
Terms:	50% down, balance upon completion
Ship via:	Michael's Signs Truck
Lead Time:	8-10 weeks upon receipt of permit

Submit to:
City of Wisconsin Dells
300 LaCrosse Street
Wisconsin Dells, WI 53965
Karen Terry
(608) 254-2012, ext. 403

Project Location:
Wisconsin Dells

Anchor Vignette

Product Description

Item	*Qty.*	*Code*		Price
A	**1**	**MFG**	**Fabricate and Install Anchor Vignette per Design Detail from ZebraDog print #17-WDE-003** Overall Dimensions: 14' 3" tall, with a base of 4' 8" x 6' 10" Includes: Monument Base, Monument Sign, Anchor exhibit on back of monument (w/gooseneck lighting)	***$26,070.00***

ANCHOR TO BE SUPPLIED BY WISCONSIN DELLS

PROPOSAL DOES NOT INCLUDE SALES TAX OR CITY PERMIT FEE

included

D	PERM	Permit procurement fees ($0.00 if no permit is required)	$165.00
E	PERM	Permit billed at cost	

Project Total ***$26,235.00***

* Above costs do not include State and Local Taxes
  Permits are billed at cost
* Final electrical connection and necessary permits provided by Owner.
* The above pricing is as approved. If original terms or conditions change relevant to additional items, services, shipment, etc., they must be approved in writing prior to expediting.
* The prices quoted above are based on normal working conditions and hours. Exclusion to normal conditions include: Inadequate soil conditions, unidentified wall conditions and mandatory after business hours work schedules.
* Michael's signs, Inc. has a one year warranty on all materials and workmanship, excluding lamps. If final payment is not
* received within 30 days of project completion all warranties are considered null and void.
* Terms are 50% down with balance due14 days after installation or delivery of signage.

International Sign Association

BBB

Member USSC United States Sign Council

APPROVAL

Signature

Date

PROPOSAL

ZEBRADOG
DYNAMIC ENVIRONMENT DESIGN

3 JULY 2019 | CITY OF WISCONSIN DELLS | Riverwalk Anchor Exhibit - Production Files | Chris Tollaksen - (608) 253-2542

HISTORY

The City of Wisconsin Dells has asked Zebradog (ZD) to provide a scope of services for developing the production art files for the Riverwalk anchor exhibit located along Broadway. Printing, fabrication and installation is not included in this scope.

PRODUCTION

Zebradog will finalize the design and layout for the anchor exhibit content based on concepts developed in 2017. Once the client has reviewed and approved the design, content and layout, final production files will be created and sent electronically to the selected sign fabricator. ZD will review all necessary submittals prior to production of the exhibit.

DELIVERABLES:

- Review of proposed anchor design with fabricator and client*
- Develop content approval document
  - Side one of vignette to provide introduction to the Riverwalk and outline vignette locations
  - Side two of vignette to feature content/imagery about the anchor on display**
- Set up of print ready files (all files will be sent electronically to the selected fabricator)
- Conference calls with client and team as needed
- Review of submittals from fabricator

* Final dimensions of exhibit to be confirmed by fabricator
** Client to provide all necessary high resolution imagery and copy regarding historic anchor that will be featured at the Broadway entrance

TIMELINE: 3-4 WEEKS

SUMMARY / SCOPE OF WORK

PRODUCTION FILES	**$2,400**

PAYMENT TERMS

- A 25% down payment will be charged at project inception. Remaining fees will be billed monthly as incurred.
- Changes to scope may result in adjustment of fees and a scope revision.
- Sales tax not included (if applicable).
- ALL INVOICES ARE DUE NET 30 DAYS FROM DATE ISSUED.

REIMBURSABLE EXPENSES

Expenses related to the performance and delivery of basic services will be billed in addition to the fees for basic services. Reimbursable expenses will be invoiced at actual cost and will include costs associated with printing of project documentation, courier, postage, stock material, software, travel costs, meals and lodging.

3 JULY 2019

SUBMITTED: MARK SCHMITZ, ZEBRADOG

ACCEPTED (PLEASE SIGN AND DATE)

DAVE'S WELDING AND REPAIRS, INC
926 GOLDEN DRIVE
WISCONSIN DELLS, WI 53965
UNITED STATES

Voice: 608-254-4310
Fax: 608-253-7409

QUOTATION

Quote Number: 729
Quote Date: Apr 26, 2019
Page: 1

Quoted To:

GAIL JERMIER

Customer ID	Good Thru	Payment Terms	Sales Rep
JERMIER, GAIL	5/26/19	Net 15 Days	

Quantity	Item	Description	Unit Price	Amount
2.00		THIS QUOTE IS FOR TWO ANCHORS TO BE MEDIA BLASTED AND POWDER COATED. THEY WILL BE RUST COLOR BROWN TO LOOK ORIGINAL. THESE ARE TAX EXEMPT AS THEY ARE FOR THE CITY.	2,000.00	4,000.00

Subtotal	4,000.00
Sales Tax	
TOTAL	**4,000.00**

THOMAS STEELE DIVISION

GRABER MANUFACTURING, INC.
1080 UNIEK DRIVE
WAUNAKEE, WI 53597
P(800) 448-7931, P(608) 849-1080, F(608) 849-1081
WWW.MADRAX.COM, E-MAIL: SALES@MADRAX.COM

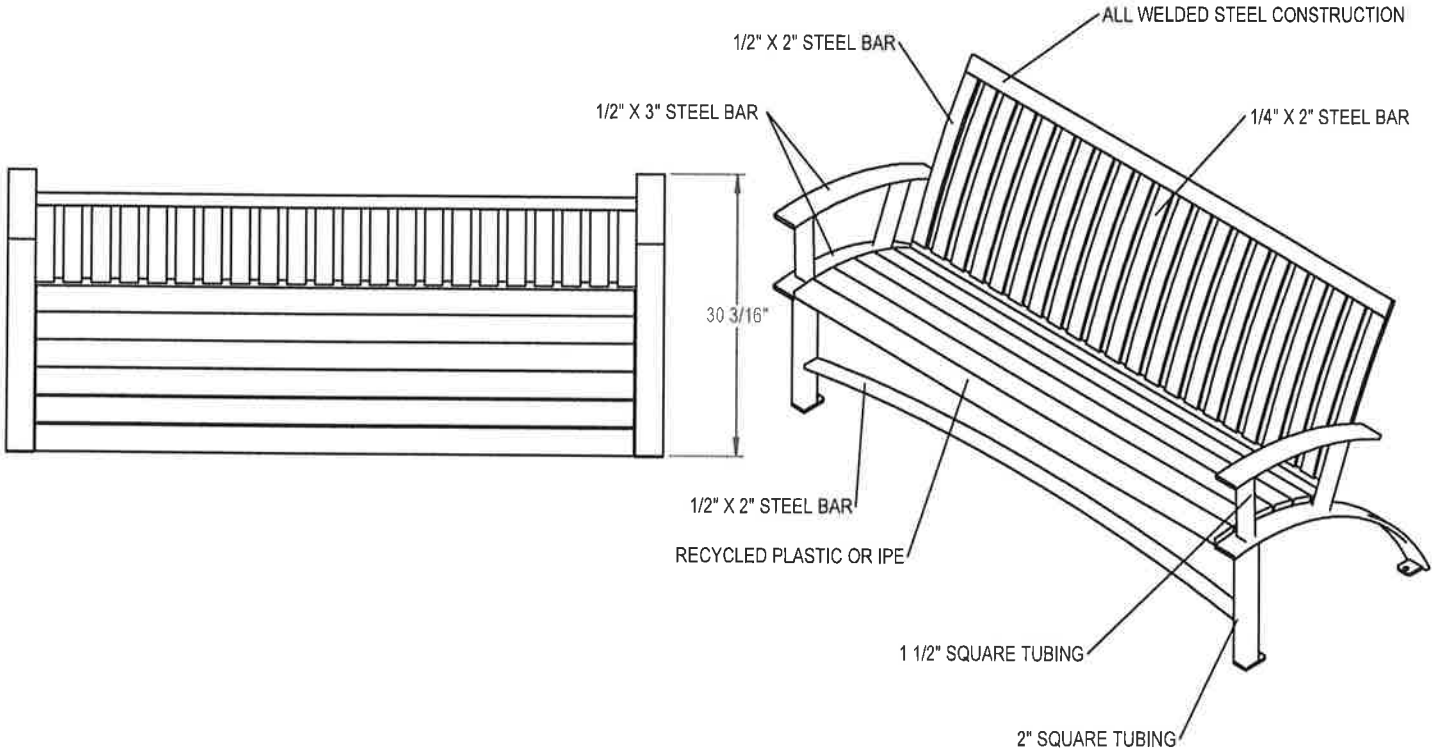

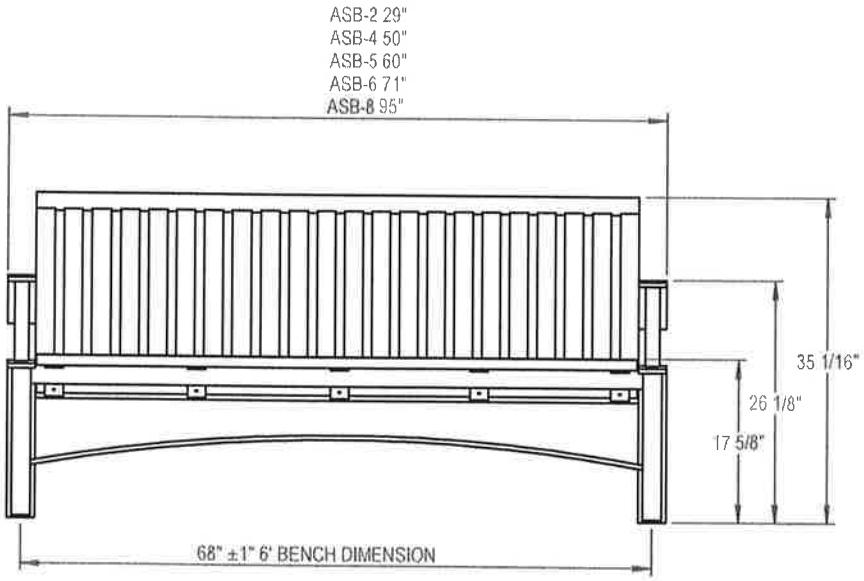

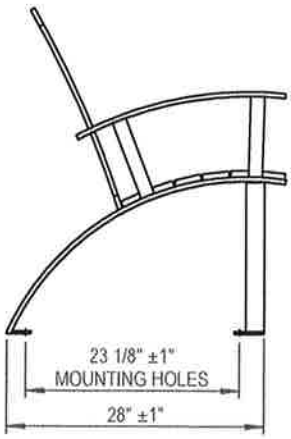

PRODUCT: ASB-2, ASB-4, ASB-5, ASB-6, ASB-8,
DESCRIPTION: ASHTON BENCH 2, 4, 5 ,6, 8 FT

DATE: 11-9-12
ENG: BW

CONFIDENTIAL DRAWING AND INFORMATION IS NOT TO BE COPIED OR DISCLOSED TO OTHERS WITHOUT THE CONSENT OF GRABER MANUFACTURING, INC. SPECIFICATIONS ARE SUBJECT TO CHANGE WITHOUT NOTICE.

©2012 GRABER MANUFACTURING, INC. ALL PROPRIETARY RIGHTS RESERVED.

SITE FURNISHING IS POWDER COATED WITH TGIC POLYESTER. STEEL SURFACE PREP INCLUDES MECHANICAL AND CHEMICAL ETCHING FOLLOWED WITH A COATING TO IMPROVE ADHESION AND CORROSION RESISTANCE.

Graber Manufacturing, Inc.
1080 Uniek Dr.
Waunakee, WI 53597

Voice: 800-448-7931
Fax: 608-849-1081

MADRAX THOMAS STEELE

QUOTATION

Quote Number: Q85962
Quote Date: Jun 19, 2019
Page: 1

Quoted To:	Ship To:
City of Wisconsin Dells 300 La Crosse Street Wisconsin Dells, WI 53965	City of Wisconsin Dells Wisconsin Dells, WI 53965

Customer ID	Good Thru	Payment Terms	Sales Rep
WIDLLS	9/19/19	Net 30 Days Credit Card Fee 3% may apply	SH

Qty	Item	Description	Unit Price	Amount
1.00	ASB-6-RPC-P	Ashton 6' Bench - Recycled Plastic Cedar - e-Steele 049/70230 TIGER 14 GLIMMER MATCH	1,355.65	1,355.65
1.00	PLQ-S	Rectangular Plaque Cast Brass with Black Background - 4H X 6L - Includes Pocket Insert on Product	340.00	340.00
		*Need Copy of Tax Exempt Form		

WE ARE A SUPPLIER ONLY: As a supplier only, we are not subject to subcontractor terms and conditions. The customer is responsible for completeness accuracy and conformity to their plans and specifications. We will not proceed with orders until all details such as materials, options, colors, etc. are complete and accurate.

Subtotal		1,695.65
Sales Tax		
Shipping & Handling		90.00
TOTAL	**US$**	**1,785.65**

SHIPPING AND HANDLING CHARGES: Shipping charges are estimated and are subject to actual shipping charges incurred at time of shipment.

MILL CERTIFICATE AVAILABLE IF SPECIFICALLY REQUESTED AND QUOTED IN ADVANCE.

CURRENT LEAD TIME: _____ Current lead time is only an estimate based upon existing production demands and material availability as of the date of this quote. Unless indicated above, shipping charges do not include unloading and placement. Lift gate service is available at an additional charge. Call Before Delivery by the freight company is available at an additional charge. If residential or inside delivery is required, there will be an additional freight charge billed to you after delivery.
CUSTOMER DELAYS: Customer delays greater than two weeks after notification that the goods are ready to ship will incurr storage charges at the rate of 1% of the sale amount per day.
TAXES: Customers are responsible for all taxes. Shipments within Wisconsin that are not tax exempt will be taxed and billed to the customer.
PRICING: Prices will be held for 90 days. Changes in quantities will effect prices. All prices are in U.S. Dollars.
CANCELLATION: Orders cancelled more than two weeks after placement are subject to a 30% to 100% charge based upon cost incurred. Custom orders can not be cancelled.
COMPLETE TERMS AND CONDITIONS: Additional terms and conditions are attached.

WE ARE A SUPPLIER ONLY: NO RETAINAGE IS ALLOWED.

DESIGN DETAIL

17-WDE-003

CLIENT: CITY OF WISCONSIN DELLS
DESCRIPTION: MONUMENT COLUMN

ZEBRADOG
DYNAMIC ENVIRONMENT DESIGN

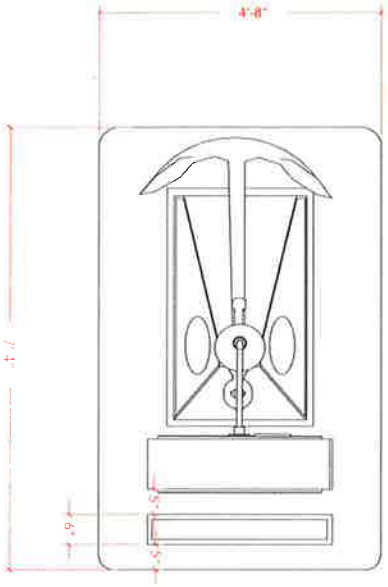

PLAN
1/2" = 1'-0"

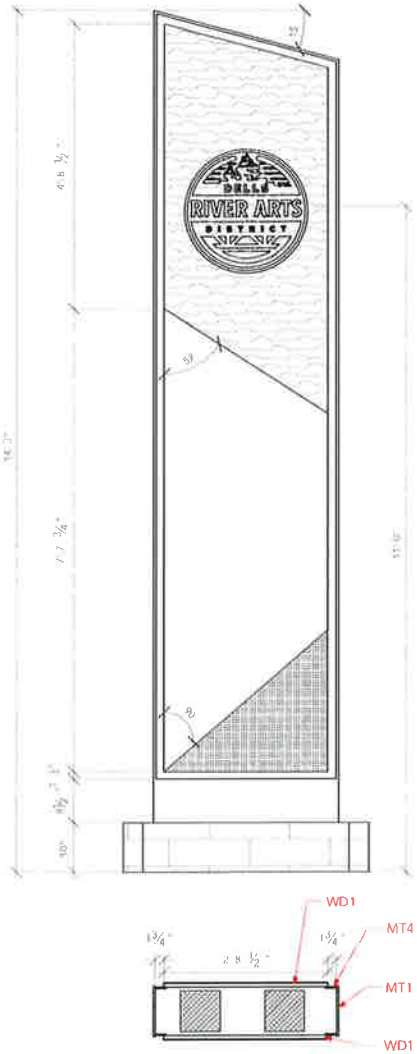

PLAN SECTION AA
1/2" = 1'-0"

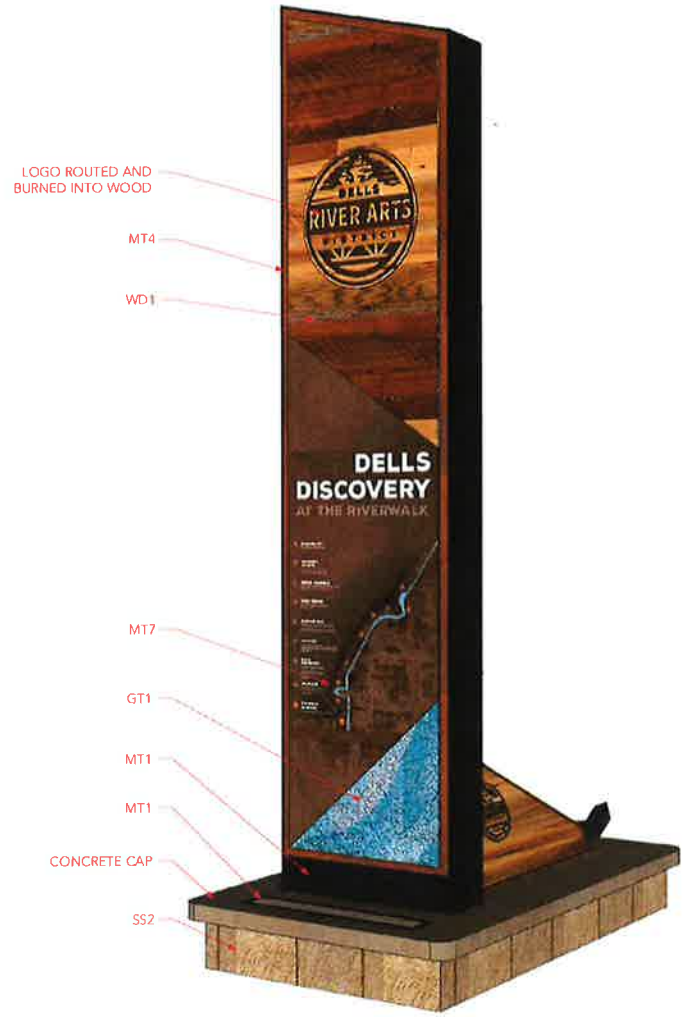

JOB SPECS

MONUMENT COLUMN DESCRIPTION

Structural (MT1) metal columns wrapped on four sides with sign monument. MT1 metal frame with inset WD1 paneling and recessed MT4 trims. All WD1 paneling to be horizontal grain. Logo routed and burned into WD1 paneling. MT7 sign panels secured to WD1 panels with color matched security screws (medium bronze).

One side to include backlit glass (GT1) tile recess mounted to a clear acrylic backer (GL1). Lighting to be LIGHT1 LED circuited to existing street light timers and controls.

Access to LED lighting for maintenance to be through front demountable MT7 sign panel. Glass tile and acrylic backer to be front demountable beyond trim for access to LIGHT1.

Monument base to match existing materials and style of cafe zones. One custom built well lights (LIGHT3) mounted flush into concrete cap. Stone veneer (SS2) mounted to wire mesh cage welded to structural columns.

ANCHOR EXHIBIT / BACK OF MONUMENT

Gooseneck light (LIGHT2) installed to WD1 panels. Printed graphic on high pressure laminate adhered to 1/8" thick metal backer fastened to WD1 panel.

Anchor cradle to be MT4 with WD1 infill on sides. WD1 recessed back 1/2" from edge of MT4. Logos routed and burned into WD1. Lag screw cradle to concrete cap with epoxy. Two metal straps (U-bolts painted black) to secure anchor to cradle. Anchor by WI Dells.

ARTWORK ON THIS PAGE IS FOR VISUAL REPRESENTATION ONLY (FPO). PRODUCTION FILES WILL BE DELIVERED TO VENDORS WHEN PROJECT IS APPROVED FOR FINAL PRODUCTION. ALL DESIGNS & SPECIFICATIONS ARE SOLE PROPERTY OF ZEBRADOG ©2017.
ARTWORK & PRINTED MATERIAL ARE NOT TO BE USED BY ANYONE WITHOUT THE CONSENT OF ZEBRADOG • 1249 WILLIAMSON ST. • MADISON, WI 53703 • 608.257.8400

DESIGN DETAIL

17-WDE-003

CLIENT: CITY OF WISCONSIN DELLS
DESCRIPTION: MONUMENT COLUMN

ZEBRADOG
DYNAMIC ENVIRONMENT DESIGN

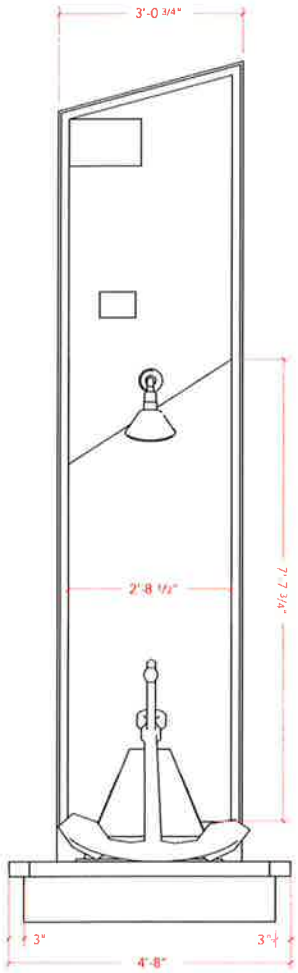

PLAN
1/2" = 1'-0"

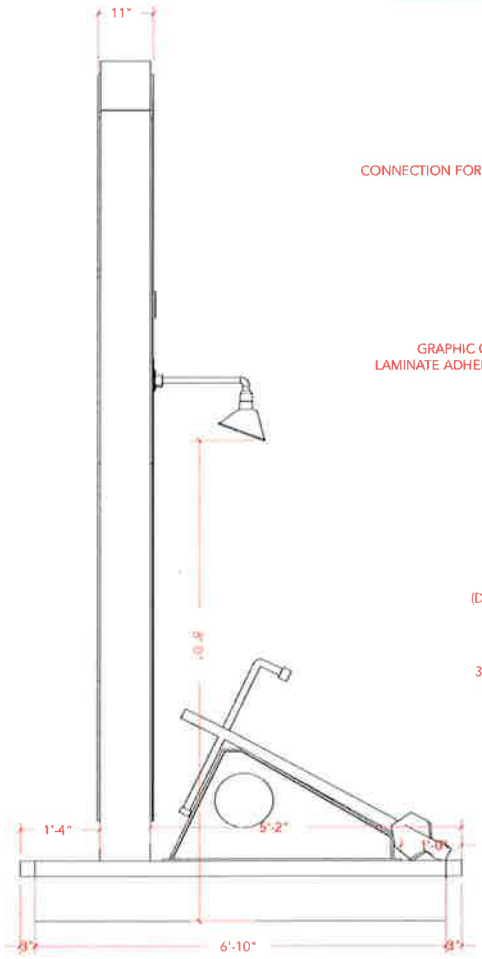

PLAN SECTION AA
1/2" = 1'-0"

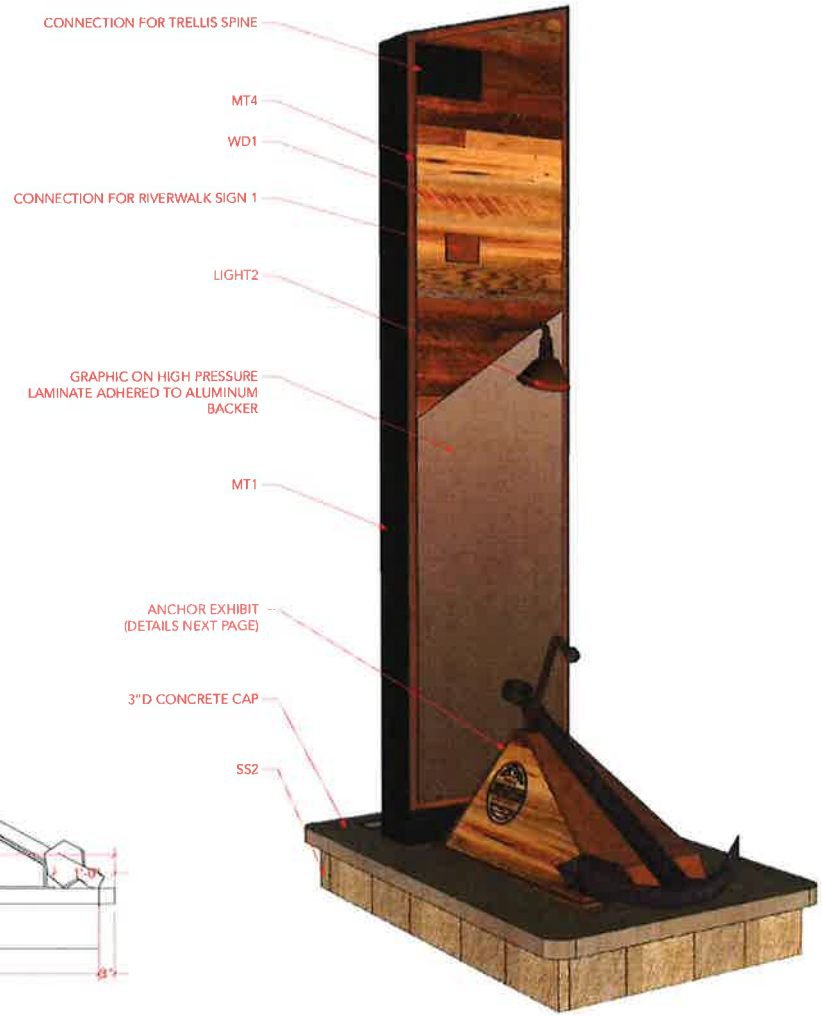

JOB SPECS

MONUMENT COLUMN DESCRIPTION

Structural (MT1) metal columns wrapped on four sides with sign monument. MT1 metal frame with inset WD1 paneling and recessed MT4 trims. All WD1 paneling to be horizontal grain. Logo routed and burned into WD1 paneling. MT7 sign panels secured to WD1 panels with color matched security screws (medium bronze).

One side to include backlit glass (GT1) tile recess mounted to a clear acrylic backer (GL1). Lighting to be LIGHT1 LED circuited to existing street light timers and controls.

Access to LED lighting for maintenance to be through front demountable MT7 sign panel. Glass tile and acrylic backer to be front demountable beyond trim for access to LIGHT1.

Monument base to match existing materials and style of cafe zones. One custom built well lights (LIGHT3) mounted flush into concrete cap. Stone veneer (SS2) mounted to wire mesh cage welded to structural columns.

ANCHOR EXHIBIT / BACK OF MONUMENT

Gooseneck light (LIGHT2) installed to WD1 panels. Printed graphic on high pressure laminate adhered to 1/8" thick metal backer fastened to WD1 panel.

Anchor cradle to be MT4 with WD1 infill on sides. WD1 recessed back 1/2" from edge of MT4. Logos routed and burned into WD1. Lag screw cradle to concrete cap with epoxy. Two metal straps (U-bolts painted black) to secure anchor to cradle. Anchor by WI Dells.

ARTWORK ON THIS PAGE IS FOR VISUAL REPRESENTATION ONLY (FPO). PRODUCTION FILES WILL BE DELIVERED TO VENDORS WHEN PROJECT IS APPROVED FOR FINAL PRODUCTION. ALL DESIGNS & SPECIFICATIONS ARE SOLE PROPERTY OF ZEBRADOG ©2017.
ARTWORK & PRINTED MATERIAL ARE NOT TO BE USED BY ANYONE WITHOUT THE CONSENT OF ZEBRADOG • 1249 WILLIAMSON ST. • MADISON, WI 53703 • 608.257.8400

DESIGN DETAIL

17-WDE-003

CLIENT: CITY OF WISCONSIN DELLS
DESCRIPTION: ANCHOR EXHIBIT

ZEBRADOG
DYNAMIC ENVIRONMENT DESIGN

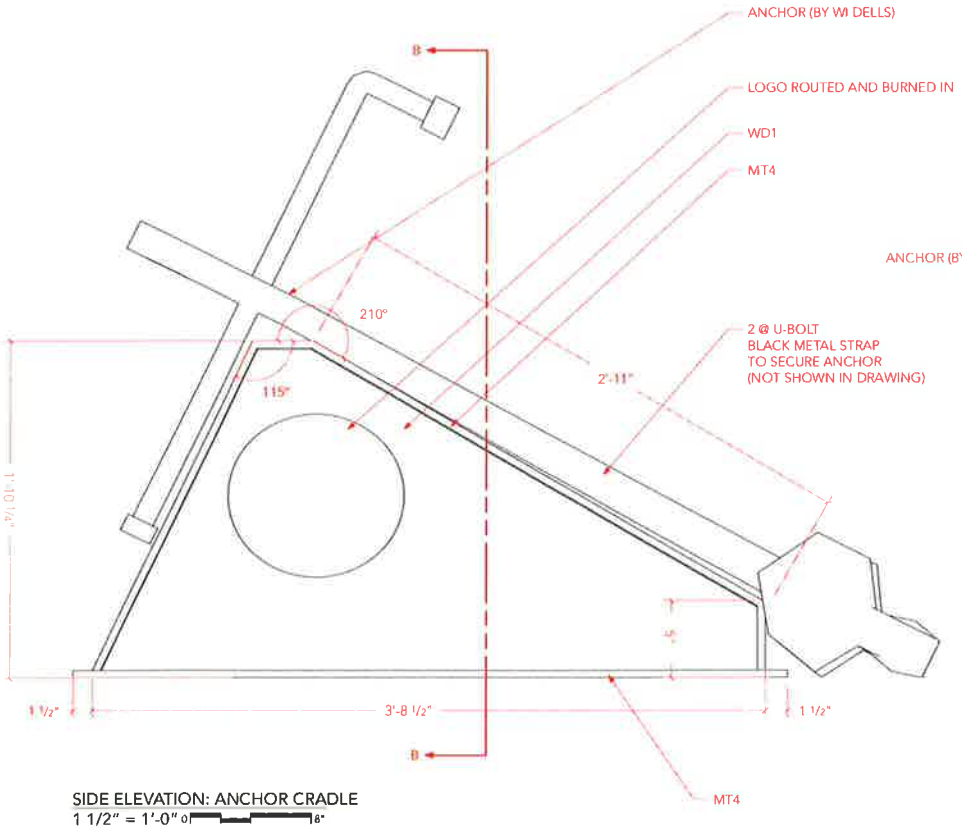

SIDE ELEVATION: ANCHOR CRADLE
1 1/2" = 1'-0"

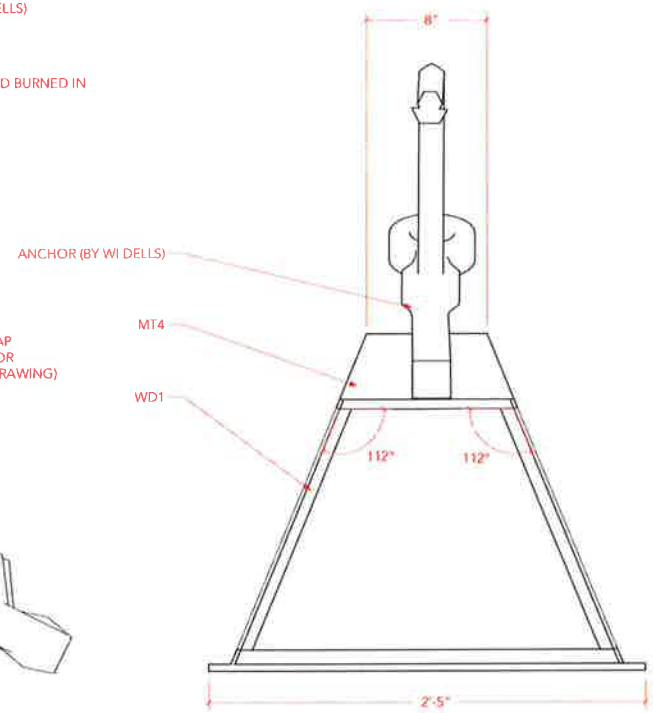

SECTION BB
1 1/2" = 1'-0"

JOB SPECS

ANCHOR EXHIBIT / BACK OF MONUMENT

Anchor cradle to be MT4 with WD1 infill on sides. WD1 recessed back 1/2" from edge of MT4. Logos routed and burned into WD1. Lag screw cradle to concrete cap with epoxy. Two metal straps (U-bolts painted black) to secure anchor to cradle. Anchor by WI Dells.

ARTWORK ON THIS PAGE IS FOR VISUAL REPRESENTATION ONLY (FPO). PRODUCTION FILES WILL BE DELIVERED TO VENDORS WHEN PROJECT IS APPROVED FOR FINAL PRODUCTION. ALL DESIGNS & SPECIFICATIONS ARE SOLE PROPERTY OF ZEBRADOG ©2017. ARTWORK & PRINTED MATERIAL ARE NOT TO BE USED BY ANYONE WITHOUT THE CONSENT OF ZEBRADOG • 1249 WILLIAMSON ST. • MADISON, WI 53703 • 608.257.8400

DESIGN DETAIL

17-WDE-003

CLIENT: CITY OF WISCONSIN DELLS
DESCRIPTION: MONUMENT COLUMN

ZEBRADOG
DYNAMIC ENVIRONMENT DESIGN

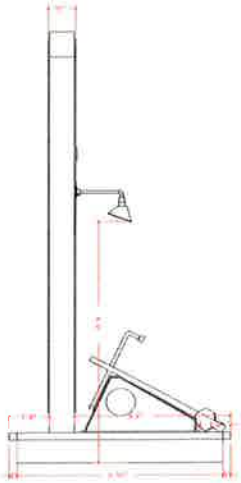

SIDE VIEW
1/4" = 1'-0"

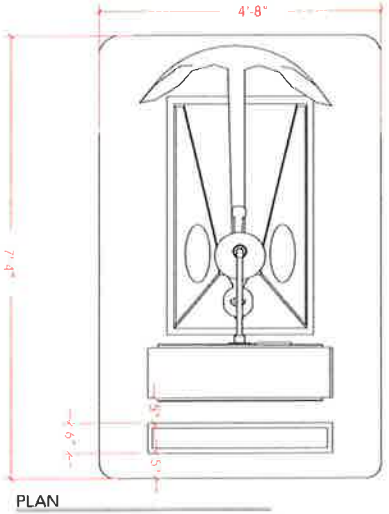

PLAN
1/2" = 1'-0"

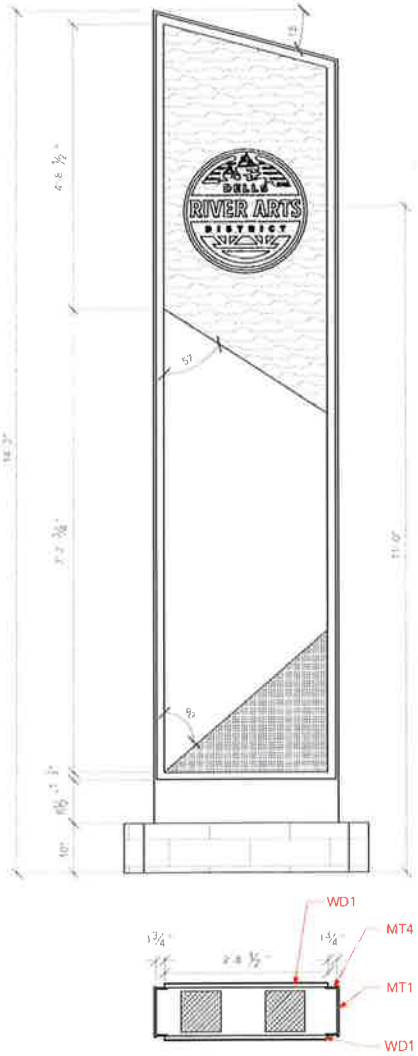

PLAN SECTION AA
1/2" = 1'-0"

JOB SPECS

MONUMENT BASE
Concrete cap. Stone veneer (SS2) mounted to wire mesh cage welded to structural columns.

APPROXIMATE WEIGHT: 800lbs

MONUMENT SIGN
Aluminum frames on aluminum posts with wood paneling, aluminum sheet paneling, and backlit glass tile.

APPROXIMATE WEIGHT: 700lbs

ANCHOR EXHIBIT / BACK OF MONUMENT

Corten Steel frame with wood paneling and large steel anchor.

APPROXIMATE WEIGHT: 500lbs

TOTAL EXHIBIT APPROXIMATE WEIGHT:
2000 - 2500lbs

ARTWORK ON THIS PAGE IS FOR VISUAL REPRESENTATION ONLY (FPO). PRODUCTION FILES WILL BE DELIVERED TO VENDORS WHEN PROJECT IS APPROVED FOR FINAL PRODUCTION. ALL DESIGNS & SPECIFICATIONS ARE SOLE PROPERTY OF ZEBRADOG ©2017.
ARTWORK & PRINTED MATERIAL ARE NOT TO BE USED BY ANYONE WITHOUT THE CONSENT OF ZEBRADOG • 1249 WILLIAMSON ST. • MADISON, WI 53703 • 608.257.8400

ITEM 10

Subject: FW: Meeting with the City of Wisconsin Dells, WI - July 11th, 2013

On Aug 1, 2013, at 1:13 PM, Brenda Rivera wrote:

Good Afternoon Mayor Landers,
Thank you once again to you and your staff for meeting with Canadian Pacific on July 11th, 2013. As mentioned in our meeting, there were some questions that came up that I offered to take back with me to get further clarification as to how CP would like to move forward on these matters. After discussing with both our Real Estate and Engineering Departments, I have outlined below the overview of the four main items that came up for discussion from the City of Wisconsin Dells. Please review with your staff at your leisure and let me know how you would like to proceed from here and if you have any further questions.

The four main items of discussion:

- Installation of official City signs on railroad bridge façade- CP would require indemnification from the City. We would need to review and approve the concept plan and the maintenance plan. CP would require an annual fee in an amount sufficient to cover the cost to remove or paint over the sign when the agreement terminates.

- Pedestrian use of lower bridge deck as part of the RiverWalk-
  1. Operations and Engineering would have to approve the plan to co-locate, the possibility of which is slim.
  2. If in the unlikely instance an approval was forthcoming, the City would have to agree to indemnify and defend CP from any and every claim of any nature, including CP negligence in connection with the bridge. CP cannot assume any potential exposure due to the co-location. This term is non-negotiable and if the City is unwilling or unable to provide a full indemnification and defense, the project cannot be contemplated further.
  3. If the City were willing to provide this full indemnification, a reimbursement agreement to compensate CP for its time and effort in researching the requirements and feasibility of the City's proposal would be required. If at any time during this investigation the project was deemed unsafe or unfeasible, CP reserves the right to suspend further investigation and the City must agree to discontinue efforts to pursue the co-use of the bridge.
  4. If a suitable plan were reached, the City would be required to maintain liability insurance in the amount of $50 million.
  5. An annual rent fee would need to be negotiated. This would be a nominal amount to compensate CP for ongoing costs to administer and manage such a use.
  6. If CP replaces the bridge in the future, the City would not be entitled to compensation for any improvements made for the pedestrian use and CP would not be in any way obligated to accommodate the co-use in future design of the bridge.

7. If the City were unable to meet all of the requirements or obtain the necessary funds within 24 months, the City agrees to discontinue efforts to pursue the co-use of the bridge.

- Bridge and at-grade crossing at Grand Cambrian Drive- The City will not be allowed access until the bridge is 100% completed per the approved final Plans and Specs. The City should have these on file.

- Billboard at the corner of Broadway and LaCrosse- The City's concerns have been brought to the attention of our advertising partners. They will investigate and take action as required pursuant to their policies for advertisement in this location and pursuant to city ordinances and requirements. If the City is interested in compensating us for the billboard at this location, CP may evaluate whether removal is possible.

Kind Regards,

Brenda K. Rivera |Advisor of Community Relations |Suite 1000-120 South 6th St, Minneapolis MN 55402 **|612-851-5651**
Canadian Pacific