Wis. Dells Business Improvement District (BID) Committee Meeting Agenda

Wednesday, August 7, 2019 at 8:30AM

Wisconsin Dells Municipal Building Council Chambers – 300 La Crosse Street – Wisconsin Dells

Members: Tara Anchor-Chair, Ald. Jesse DeFosse-Vice Chair, Mark Sweet-Secretary
Justin Draper, Dan Gavinski, Adam Makowski, Jackie Morse, Kevin Ricks, Kyler Royston

---

1. Call to Order
2. Approval of the July 24, 2019 Meeting Minutes (attachment)
3. Introduction – Gail Jermier – History of Anchors (attachment)
4. Discussion/Decision – Riverwalk Anchor Project (attachment)
   a. Review – Revised design of smaller 10' entrance sign
   b. Copy – Word count indicated in revised design of smaller 10' entrance sign
   c. Discussion – Second anchor placement. Review original ZD design vs. alternative ideas
5. Decision - Illinois Avenue Street Banners – Final Design
6. Discussion – La Crosse Street Hill (Thad and Kevin)
7. Update – Summer Entertainment Lot
8. Next Meeting – Wednesday, August 21, 2019
9. Adjournment

The Committee may take action on any of the above listed agenda items.

Tara Anchor, Chairperson
Agenda Posted: August 2, 2019

Open Meetings Notice: If this meeting is attended by members of the Common Council who are not members of this committee, their attendance may create a quorum of another city commission, board or committee under the Wisconsin Open Meetings Law; However, no formal action will be taken by any governmental body at the above stated meeting other than the body, committee, commission, or board identified in this meeting notice. Please be advised that upon reasonable notice, the City of Wisconsin Dells will furnish appropriate auxiliary aids and services to afford individuals with disabilities an equal opportunity to participate in meeting activities.

ITEM 2

BID Committee
July 24, 2019

Attending: Tara Anchor; chairwoman
Kevin Ricks; BID
Jesse DeFosse; BID
Justin Draper; BID
Adam Makowski; BID
Dan Gavinski; BID
Mark Sweet; BID
Mayor Ed Wojnicz
Chris Tollaksen; Public Works
Jenna Loda Eddy
Brian Holzem
Don Spearbecker

Meeting called to order by Chairwoman Tara Anchor.
Motion made by Justin Draper to approve July 10 minutes. Second by Adam Makowski. Approved.

UPDATE: RAILROAD BRIDGE LIGHTING
Don Spearbecker from Joe Lord Systems updated BID on discussions held with representatives of Canadian Pacific (CP) Railroad. CP is asking for a lump sum one time payment from $50,000 - $100,000 pending legal fees for use of the bridge to install lighting. In addition, CP will demand that installation of fixtures take place from river barges which would add significantly to the overall cost of the project. Don's guess is the project would now cost in excess of $300,000. No final decision was made about the future of the project, however consensus opinion of the committee was CP lump sum fee and their demand were excessive.

RIVER WALK ANCHOR PROJECT:
Design firm Zebra Dog reviewed plans for the super vignette which would be a freestanding structure at the entrance to the River Walk. Their recommendation was to reduce the height of the structure to 10 feet. Reason given was due to wind load. Reduction of the height by 3 feet should result in some savings on the final cost of the display. No action was taken on the ZD recommendation. ZD is also preparing a plan for a smaller display of the second anchor. Gail Jermier is gathering information for copy writing.

ILLINOIS AVENUE BANNERS:
Plans will be moving forward to order a bench for the Illinois Avenue bridge bump out area. Discussion centered on whether a bench plaque was the best way to recognize the Rotary Club contribution to the project. The bench plaque is limited to 4 lines and 26 characters. It was also felt that this would be the best time to honor Bill Brown's involvement with the River Walk since its inception. Ideas will be presented to BID on how best to honor Bill Brown.

DISCUSSION: TRAIL SYSTEM and PEDESTRIAN BRIDGE:
The following points were made n discussion:
!. If use of DNR land is sought at some point in the process, the chances for their approval of the land use may improve measurably if a trail system is incorporated into the plan.
2. An element of honoring the Ho-Chunk Nation and their connection to the land would also give us a better opportunity to gain DNR approval.
3. Demonstrating a viable pathway connection from this area on Stand Rock Road to the new high school would showcase a safe walking/biking alternative for students living on the east side of the river. Application for grant funds for this project could come into play.

4. Showing a plan to construct a pedestrian bridge over the river and connecting with the existing River Walk also could be beneficial to obtaining DNR approval.
5. There is privately owned land next to the DNR area which could be pursued to start the project.
6. Connection of this trail project with the planned senior living project at Riverwood would also be positive.
7. A detailed plan would need to be prepared for the trail project to gain state DNR approval.

DISCUSSION: CANOE PARADE
If this project were to happen it is still felt that it belongs on Hwy. 13-23 for maximum visibility. That would require State DOT approval which has already been rejected on the bridge. Lower Dells area was noted as an alternative to the bridge. Support was still expressed for the concept, however because of this issue it may not be considered a high priority for the 2020 budget. If Dot approval is not received, an additional alternate location for the Canoe Parade could be as part of a trail system on the west side of the river.

OTHER UPDATES:
The city Planning Commission approved the closure of Elm Street by Chalet Lanes for a future public plaza area. It is expected that the Public Works and Finance Committees will have input in the approval process. It may go to the City Council in September. There is a grant program for development of the plaza which the city expects to pursue. Cost of the infrastructure repairs under Elm Street are expected to be considerable, but no precise numbers have been attached to the project. With all approval in place, it is still not expected that an Elm Street Plaza could be operational until 2021.

DISCUSSION: 2020 BUDGET PLANNING:
Lines items of the 2019 Operational Budget were reviewed to start the process of determining priorities for 2020 funding. Process will continue at the next several meetings.

Motion to adjourn made by Justin Draper. Second by Dan Gavinski. Approved.

ITEM 3

The anchors:

Alexander Mitchell

In 1878, the steamer Alexander Mitchell was built in Kilbourn City by the Kilbourn Boat Co. The steamer was named after the president of the railroad the first major promoter of tourism and the Dells. She was piloted by D.C. Van Wie who previously piloted the Champion. The company was sold in 1892 to the Dells Resort Company. Around the turn of the century, before the dam was built, the Alexander Mitchell was sunk in the Dells in the area which is called the Lower Dells today. She had outlived her usefulness as wooden boats seemed to have a pretty short life span. Other steamers where burned in the bay. The anchor was found in the lower Dells area near the island below the dam in 2008 by Jim Gehrke and his son Jeremy. They donated it to the Dells Country Historical Society in 2012. The Society received a grant from the Gregory C. Charitable Foundation to help preserve and mount the anchor on the River Walk in downtown Wisconsin Dells. Greg was the great grand- son of the pilot of the Alexander Mitchell, D.C. Van Wie.

Winnebago

The Winnebago was built in 1922. It was the first steel-hulled boat at the Dells and the last steamboat on the Wisconsin River. She was first piloted by Jack Morse. Seasoned pilot Arnal Priester trained cub pilot, Oliver Reese, age 22, to be the steamers last pilot. During the war years 1942-45 the steamer Winnebago was used more because of the fuel shortage. In the winter of 1948, the Dells Boat Company converted the Winnebago to diesel and it was named the Clipper/Winnebago still in service today. The anchor from the steamer was rescued by its young pilot, Oliver Reese. It was donated in 2016 to the Dells Country Historical Society by Reese's daughters .The Society received a grant from the Gregory C. Van Wie Charitable Foundation to preserve and mount the anchor on the River Walk in downtown Wisconsin Dells.

ITEM 4

ZEBRADOG
DYNAMIC ENVIRONMENT DESIGN

DESIGN SCHEMATIC

07.30.19 | WISCONSIN DELLS | 19-WDE-001 | Anchor Exhibit

RENDERING A

DESIGN SCHEMATIC

ZEBRADOG
DYNAMIC ENVIRONMENT DESIGN

07.30.19 | WISCONSIN DELLS | 19-WDE-001 | Anchor Exhibit

ELEVATION A

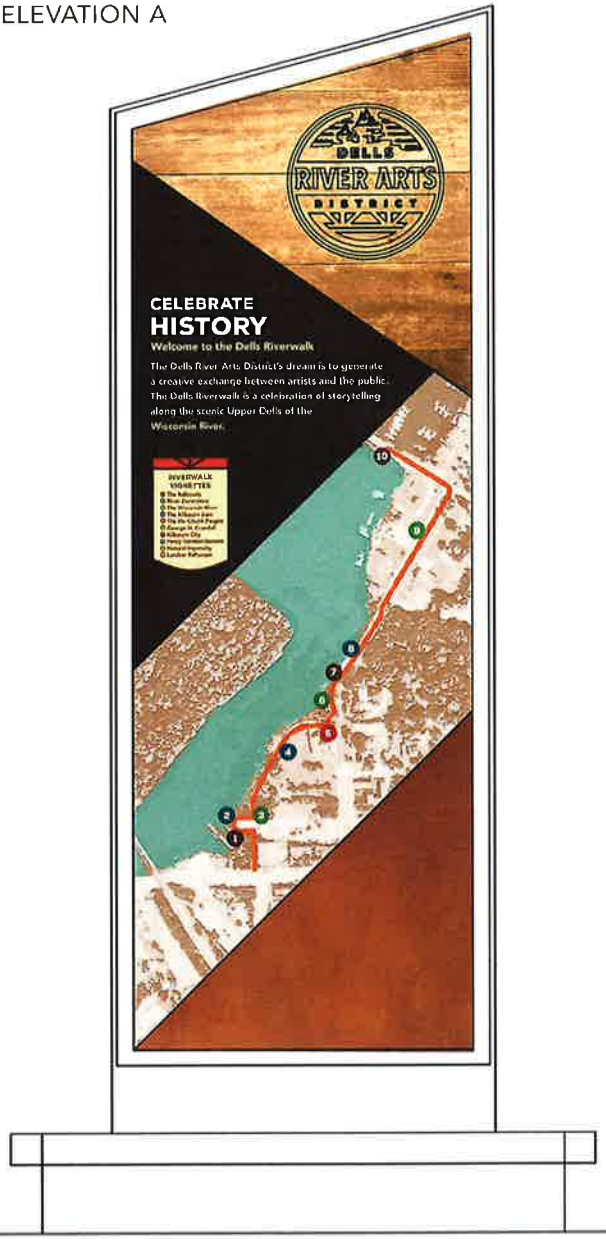

FRONT— MAP

Title: 2-3 Words

Subtitle: 5-10 words (shown with 5 words

Copy: 20-40 words (shown with 35 words)

Image: Map of Vignettes

Tiled Base Panel

BACK — ANCHOR

Title: 2-3 Words

Subtitle: 5-10 Words

Copy: 50-75 Words (shown with 75 words)

Background Image Needed.

DISCLAIMER

*NOTE: All content is placeholder ONLY. Concept may change based on final content.

RENDERING B

DESIGN SCHEMATIC

07.30.19 | WISCONSIN DELLS | 19-WDE-001 | Anchor Exhibit

ZEBRADOG
DYNAMIC ENVIRONMENT DESIGN

ELEVATION B

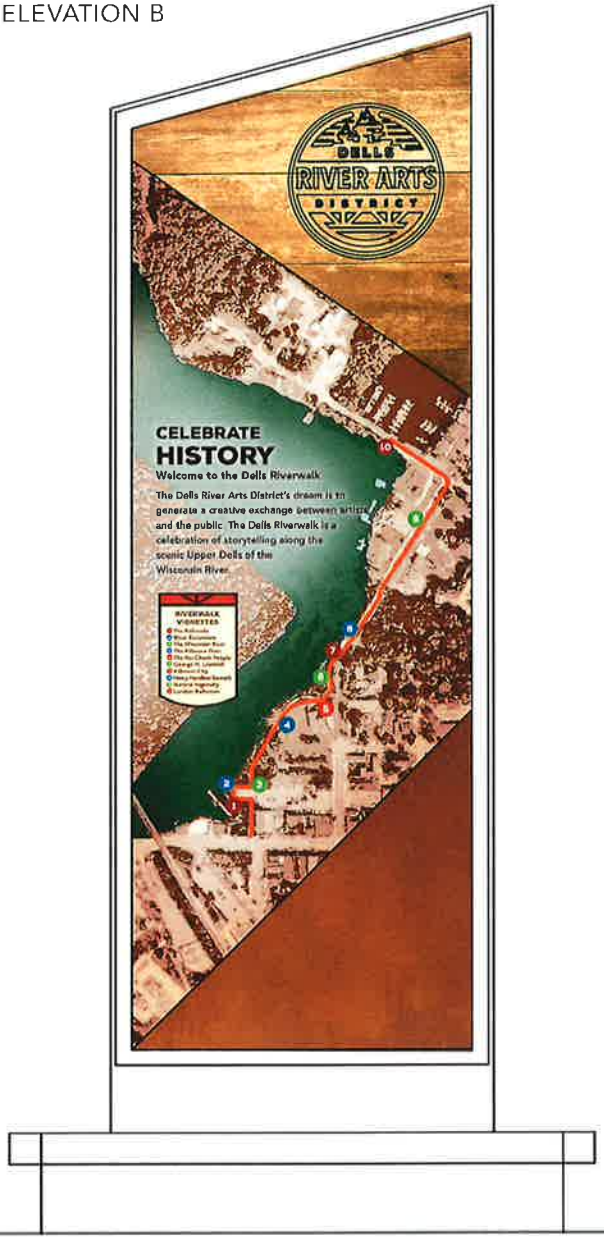

FRONT— MAP

Title: 2-3 Words

Subtitle: 5-10 words (shown with 5 words

Copy: 20-40 words (shown with 35 words)

Image: Map of Vignettes

Corten Base Panel

BACK — ANCHOR

Title: 2-3 Words

Subtitle: 5-10 Words

Copy: 50-75 Words (shown with 75 words)

Background Image Needed.

DISCLAIMER

*NOTE: All content is placeholder ONLY. Concept may change based on final content.

RENDERING C

DESIGN SCHEMATIC

07.30.19 | WISCONSIN DELLS | 19-WDE-001 | Anchor Exhibit

ZEBRADOG
DYNAMIC ENVIRONMENT DESIGN

ELEVATION C

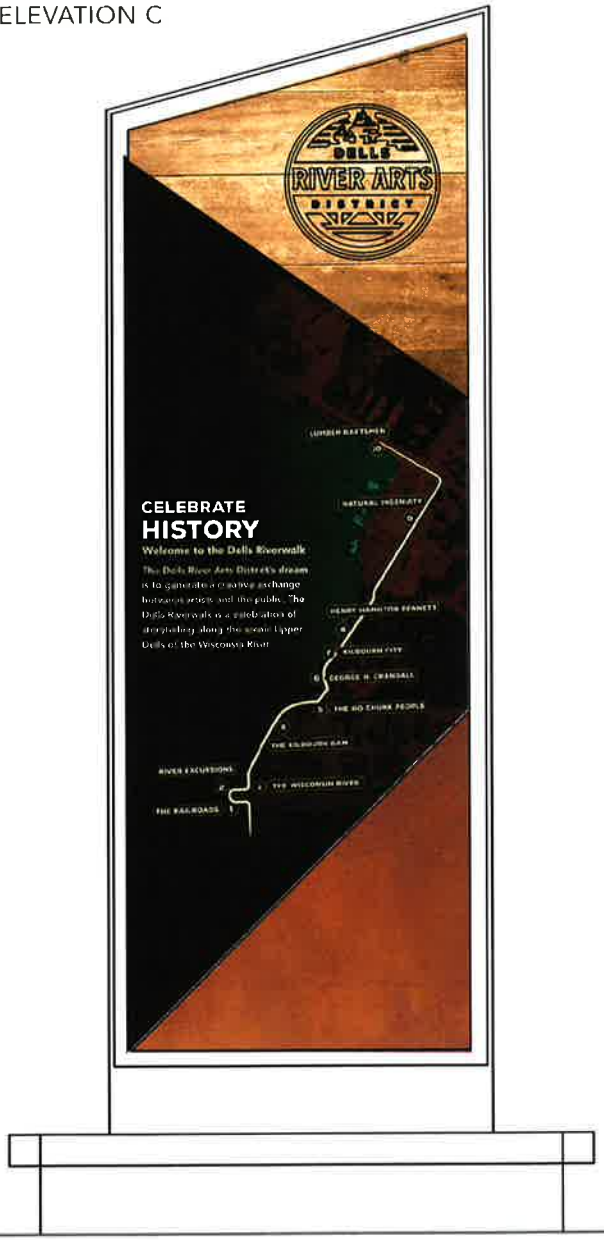

FRONT— MAP

Title: 2-3 Words

Subtitle: 5-10 words (shown with 5 words

Copy: 20-40 words (shown with 35 words)

Image: Map of Vignettes

Corten Base Panel

BACK — ANCHOR

Title: 2-3 Words

Subtitle: 5-10 Words

Copy: 50-75 Words (shown with 75 words)

Background Image Optional
Can feature a texture

Corten Base Panel

DISCLAIMER

*NOTE: All content is placeholder ONLY. Concept may change based on final content.

ITEM 4

DESIGN DETAIL

17-WDE-003

CLIENT: CITY OF WISCONSIN DELLS
DESCRIPTION: RIVERWALK GATEWAY AT ILLINOIS AVENUE

ZEBRADOG
DYNAMIC ENVIRONMENT DESIGN

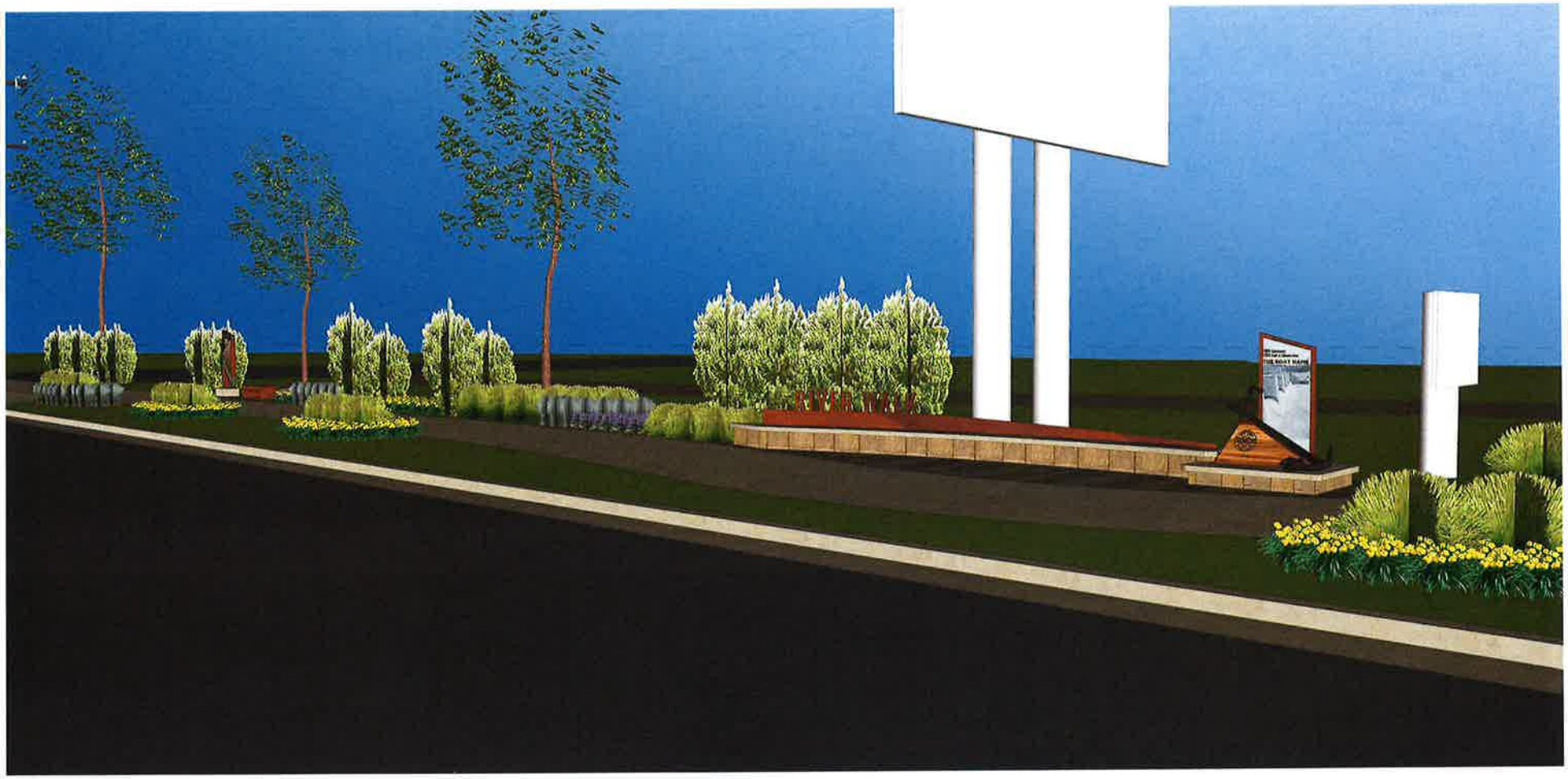

PERSPECTIVE: ILLINOIS AVE GATEWAY ZONE
NOT TO SCALE

ARTWORK ON THIS PAGE IS FOR VISUAL REPRESENTATION ONLY (FPO). PRODUCTION FILES WILL BE DELIVERED TO VENDORS WHEN PROJECT IS APPROVED FOR FINAL PRODUCTION. ALL DESIGNS & SPECIFICATIONS ARE SOLE PROPERTY OF ZEBRADOG ©2017.
ARTWORK & PRINTED MATERIAL ARE NOT TO BE USED BY ANYONE WITHOUT THE CONSENT OF ZEBRADOG • 1249 WILLIAMSON ST. • MADISON, WI 53703 • 608.257.8400

DESIGN DETAIL

17-WDE-003

CLIENT: CITY OF WISCONSIN DELLS
DESCRIPTION: RIVERWALK GATEWAY AT ILLINOIS AVENUE

ZEBRADOG
DYNAMIC ENVIRONMENT DESIGN

EXAMPLES OF PERENNIALS PLANTED IN TIGHT GREENSPACES BETWEEN STREETS

EXAMPLES OF PERENNIALS PLANTED IN TIGHT GREENSPACES BETWEEN STREETS

LOW HEIGHT FLOWERING TREES CAN WORK IN THE GREENSPACE BETWEEN THE WALKWAY AND THE STREET WITHOUT INTERFERING WITH POWER LINES ABOVE.

JOB SPECS

LANDSCAPING NARRATIVE

Zebradog's recommendation to integrate the River Road and Illinois Avenue end of the Riverwalk into the Riverwalk brand benefits from improved landscaping.

The right of way bordering the concrete Riverwalk pathway includes 10'-0" of greenspace on the streetside and 4'-6" of greenspace on the river side along River Road.

Our recommendation is for the City of Wisconsin Dells to utilize these green spaces for as much landscape planting as possible. We recommend placing deciduous shade trees matching the existing arbor plan for the city every 40'-60' on the river side right of way. In addition we recommend groupings of small evergreen shrubs such as junipers.

In the 10'-0" greenspace between the Riverwalk and River Road we recommend that this area be considered for berms and low perennial plantings consistent with what might be planted on a boulevard. Perennials that are hardy, salt resistant, low maintenance, and add color through various seasons may include: Bronze Beauty Bugleweed, Sella Do Oro Daylily, Boston Ivy, Little Bluestem grass, Prairie Dropseed, and Drawf Korean Lilac.

In the area between the Natural Ingenuity Story Vignette and the corner of Illinois Ave and River Road a more defined landscape plan is required to create a gateway experience. We recommend working with a landscape architect to complete a planting plan for this gateway zone. See next pages.

ARTWORK ON THIS PAGE IS FOR VISUAL REPRESENTATION ONLY (FPO). PRODUCTION FILES WILL BE DELIVERED TO VENDORS WHEN PROJECT IS APPROVED FOR FINAL PRODUCTION. ALL DESIGNS & SPECIFICATIONS ARE SOLE PROPERTY OF ZEBRADOG ©2017.
ARTWORK & PRINTED MATERIAL ARE NOT TO BE USED BY ANYONE WITHOUT THE CONSENT OF ZEBRADOG • 1249 WILLIAMSON ST. • MADISON, WI 53703 • 608.257.8400

DESIGN DETAIL

17-WDE-003

CLIENT: CITY OF WISCONSIN DELLS
DESCRIPTION: GATEWAY ZONE CONCEPTUAL PLAN

ZEBRADOG
DYNAMIC ENVIRONMENT DESIGN

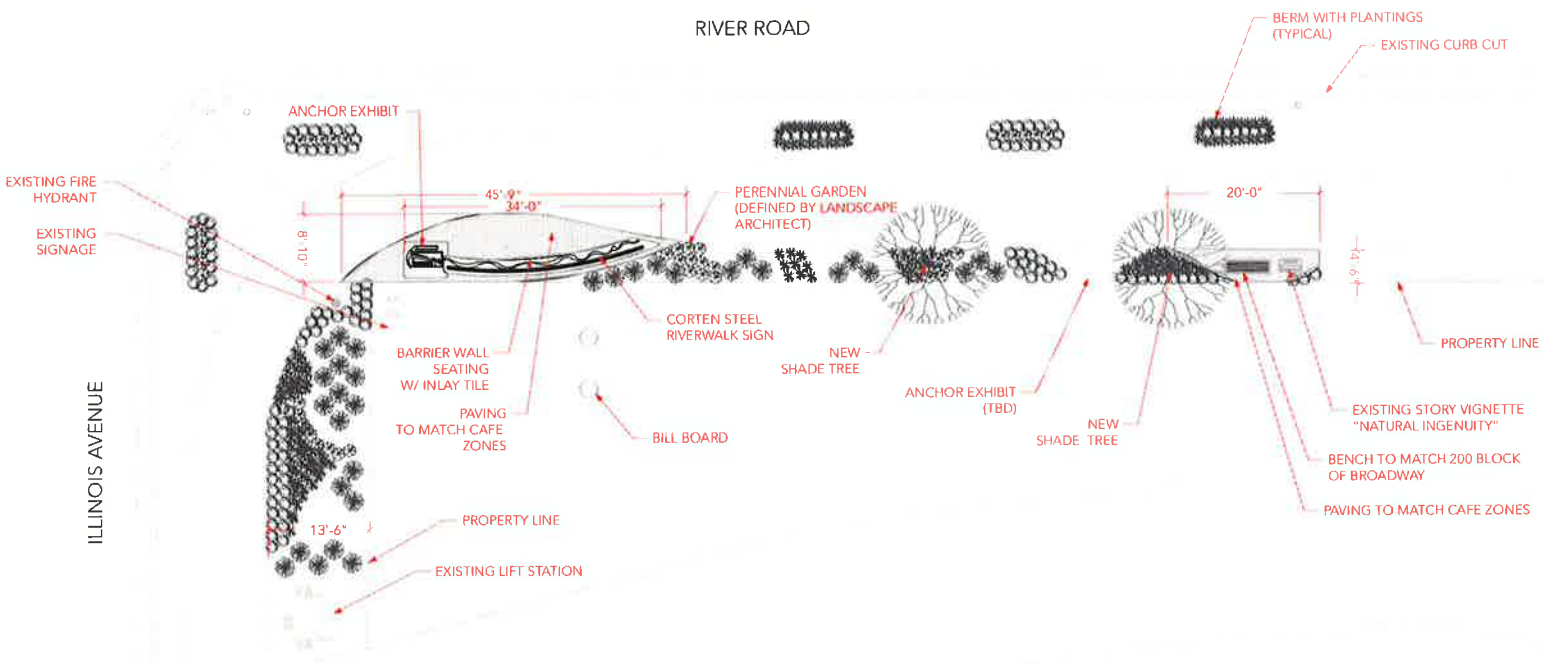

PLAN: ILLINOIS AVE GATEWAY ZONE
1/16" = 1'-0" 0 192"

JOB SPECS

LANDSCAPE ARCHITECT
Provide pricing for development of planting plan.

Provide initial cost estimate for materials sourcing and construction to include: Survey and site preparation, stone paver installation, construction and installation of barrier wall seating, corten steel Riverwalk sign, and anchor exhibit.

GENERAL CONTRACTOR
Provide initial cost estimate for services relating to survey and site preparation, and installation of concrete and masonry pavers, barrier wall, corten steel Riverwalk sign, and Anchor Exhibit.

CITY OF WISCONSIN DELLS
Coordinate with Landscape Architect to develop planting plan in Gateway Zone and extending along River Road.

Install all plantings, wood chips, mulch, and grass in accordance with plans developed by Landscape Architect.

Source, provide, and place bench matching the style of benches installed on Broadway Avenue 200 Block.

ARTWORK ON THIS PAGE IS FOR VISUAL REPRESENTATION ONLY (FPO). PRODUCTION FILES WILL BE DELIVERED TO VENDORS WHEN PROJECT IS APPROVED FOR FINAL PRODUCTION. ALL DESIGNS & SPECIFICATIONS ARE SOLE PROPERTY OF ZEBRADOG ©2017.
ARTWORK & PRINTED MATERIAL ARE NOT TO BE USED BY ANYONE WITHOUT THE CONSENT OF ZEBRADOG • 1249 WILLIAMSON ST. • MADISON, WI 53703 • 608.257.8400

DESIGN DETAIL

17-WDE-003

CLIENT: CITY OF WISCONSIN DELLS
DESCRIPTION: ILLINOIS AVE BARRIER WALL

ZEBRADOG
DYNAMIC ENVIRONMENT DESIGN

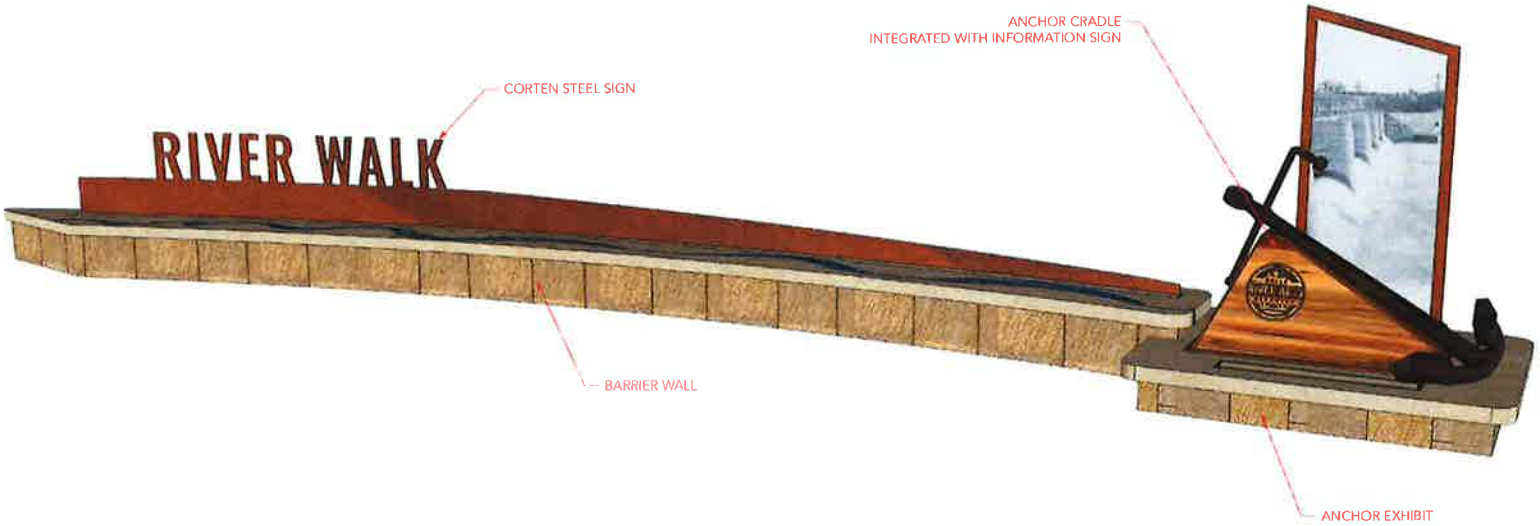

JOB SPECS

LANDSCAPE ARCHITECT
Barrier Wall and Seat
Qty: 1
Final Size: 34'-10"W x 2'-3"D x 1'-7"H

Prepare Construction Documents and details for the construction of barrier wall consistent with design of existing barrier walls installed in Cafe Zones.

Barrier Wall and Seat
Qty: 1
Final Size: 34'-10"W x 2'-3"D x 1'-7"H

Construct barrier wall consistent with existing barrier walls installed at Cafe Zones. 3" Thick concrete cap with channel to receive custom inlaid tile. Base of wall to be finished with stone veneer to match existing Cafe Zones

ARTWORK ON THIS PAGE IS FOR VISUAL REPRESENTATION ONLY (FPO). PRODUCTION FILES WILL BE DELIVERED TO VENDORS WHEN PROJECT IS APPROVED FOR FINAL PRODUCTION. ALL DESIGNS & SPECIFICATIONS ARE SOLE PROPERTY OF ZEBRADOG ©2017.
ARTWORK & PRINTED MATERIAL ARE NOT TO BE USED BY ANYONE WITHOUT THE CONSENT OF ZEBRADOG • 1249 WILLIAMSON ST. • MADISON, WI 53703 • 608.257.8400

DESIGN DETAIL

17-WDE-003

CLIENT: CITY OF WISCONSIN DELLS
DESCRIPTION: ILLINOIS AVE BARRIER WALL

ZEBRADOG
DYNAMIC ENVIRONMENT DESIGN

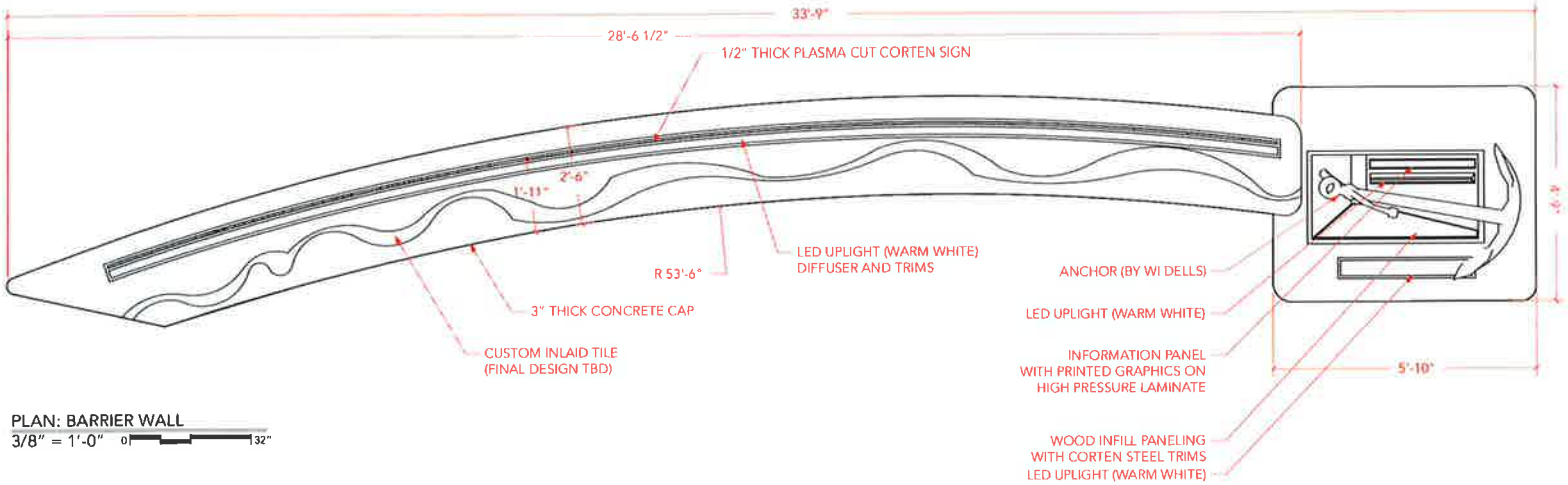

PLAN: BARRIER WALL
3/8" = 1'-0"

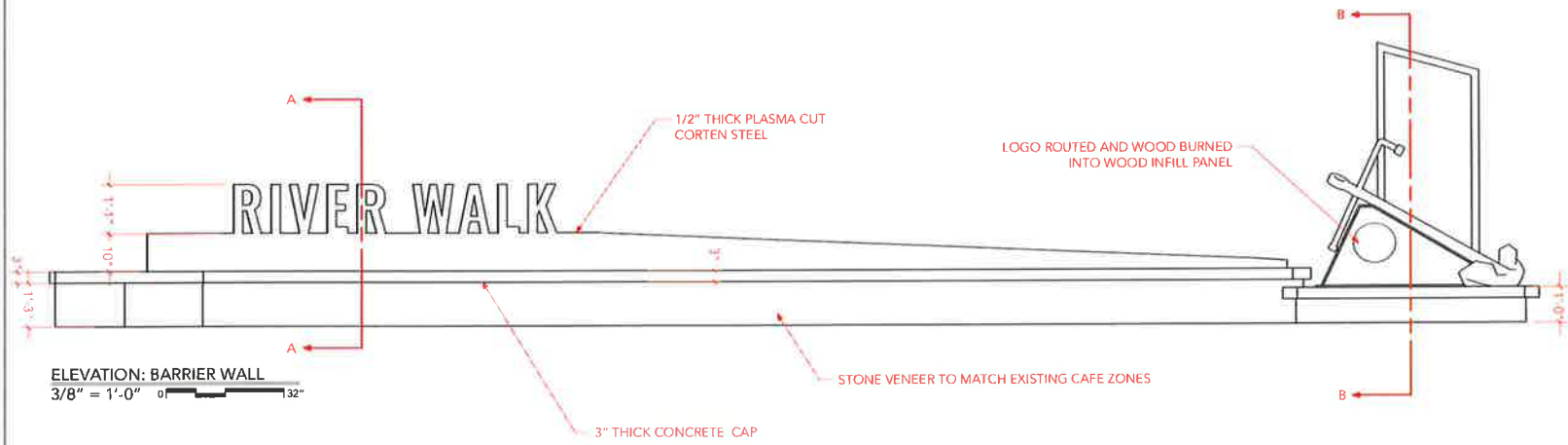

ELEVATION: BARRIER WALL
3/8" = 1'-0"

JOB SPECS

LANDSCAPE ARCHITECT
Barrier Wall and Seat
Qty: 1
Final Size: 33'-9"W x 4'-9"D x 6'-3"H

Prepare Construction Documents and details for the construction of barrier wall consistent with design of existing barrier walls installed in Cafe Zones.

Barrier Wall and Seat
Qty: 1
Final Size: 33'-9"W x 2'-6"D x 3'-10 1/2"H

Construct barrier wall consistent with existing barrier walls installed at Cafe Zones. 3" Thick concrete cap with channel to receive custom inlaid tile. Base of wall to be finished with stone veneer to match existing Cafe Zones. Well in cap to receive plasma cut corten steel Riverwalk sign. Riverwalk sign anchored below cap. Grazing LED well uplight continuous in front of sign. Use warm white LEDs. Diffuse well light with frosted polycarbonate. Wells finish flush with concrete cap with trims painted brown to match corten steel. Consider drainage and environmental factors when detailing wells, light, and trims.

Anchor Exhibit
Qty: 1
Final Size: 33'-9"W x 2'-6"D x 3'-10 1/2"H

Construct a platform consistent with existing barrier walls installed at Cafe Zones. 3" Thick concrete cap. Base of wall to be finished with stone veneer to match existing Cafe Zones.

Well in cap to receive grazing LED well uplight continuous in front of sign. Use warm white LEDs. Diffuse well light with frosted polycarbonate. Wells finish flush with concrete cap with trims painted brown to match corten steel. Consider drainage and environmental factors when detailing wells, light, and trims.

Anchor Cradle and signage details next page.

ARTWORK ON THIS PAGE IS FOR VISUAL REPRESENTATION ONLY (FPO). PRODUCTION FILES WILL BE DELIVERED TO VENDORS WHEN PROJECT IS APPROVED FOR FINAL PRODUCTION. ALL DESIGNS & SPECIFICATIONS ARE SOLE PROPERTY OF ZEBRADOG ©2017.
ARTWORK & PRINTED MATERIAL ARE NOT TO BE USED BY ANYONE WITHOUT THE CONSENT OF ZEBRADOG • 1249 WILLIAMSON ST. • MADISON, WI 53703 • 608.257.8400

DESIGN DETAIL

17-WDE-003

CLIENT: CITY OF WISCONSIN DELLS
DESCRIPTION: ILLINOIS AVE ANCHOR EXHIBIT

ZEBRADOG
DYNAMIC ENVIRONMENT DESIGN

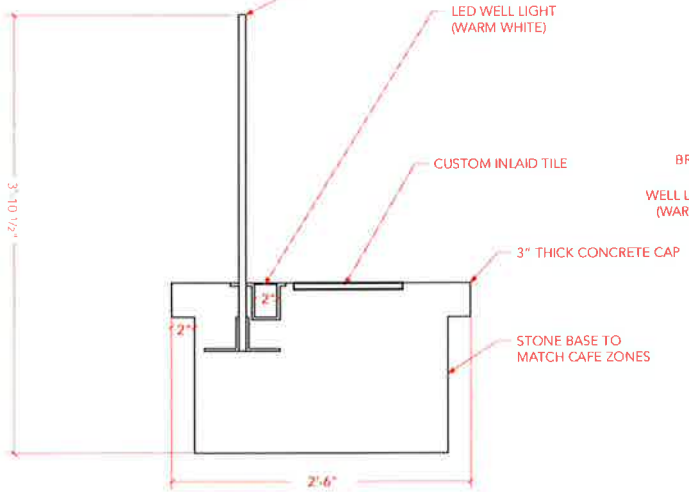

SECTION AA: BARRIER WALL
1" = 1'-0" 0 12"

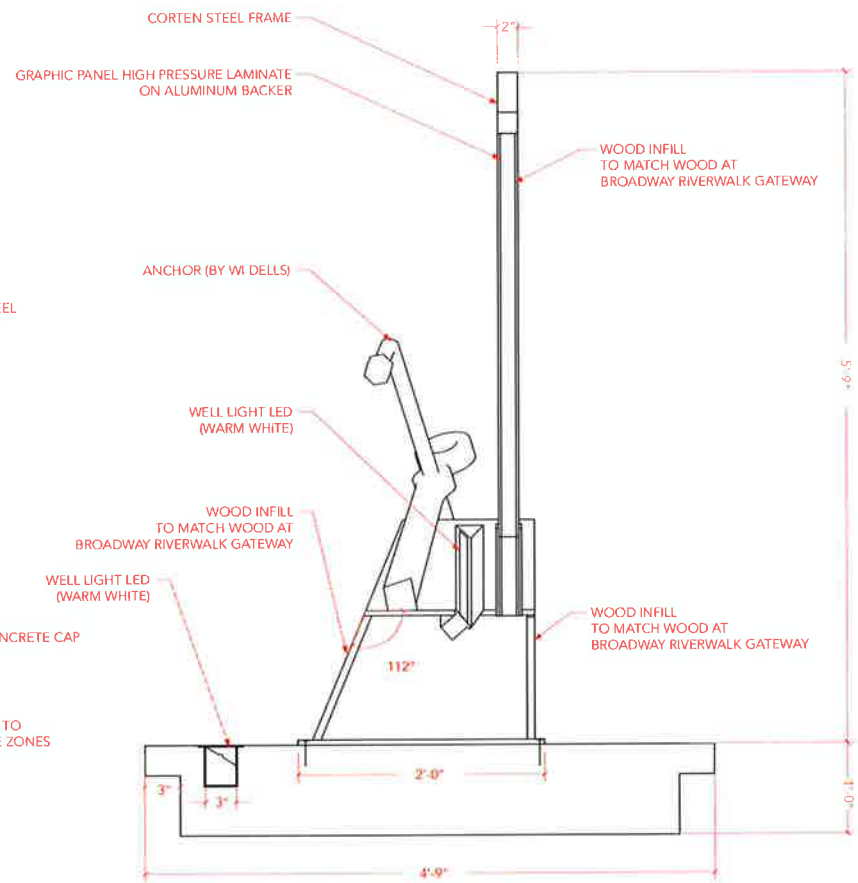

SECTION BB: ANCHOR EXHIBIT
1" = 1'-0" 0 12"

JOB SPECS

LANDSCAPE ARCHITECT

Anchor Exhibit
Qty: 1
Final Size: 5'-10"W x 4'-9"D x 1'-10"H

Construct a platform consistent with existing barrier walls installed at Cafe Zones. 3" Thick concrete cap. Base of wall to be finished with stone veneer to match existing Cafe Zones.

Well in cap to receive grazing LED well uplight continuous in front of sign. Use warm white LEDs. Diffuse well light with frosted polycarbonate. Wells finish flush with concrete cap with trims painted brown to match corten steel. Consider drainage and environmental factors when detailing wells, light, and trims.

Anchor Cradle and signage details next page. Anchor cradle to be MT4 with WD1 infill on sides. WD1 recessed back 1/2" from edge of MT4. Logos routed and burned into WD1. Lag screw cradle to concrete cap with epoxy. Two metal straps (U-bolts painted black) to secure anchor to cradle. Anchor by WI Dells. Well light integrated into corten cradle to uplight information sign. Use warm white LEDs. Diffuse well light with frosted polycarbonate. Consider drainage and environmental factors when detailing.

Information sign integrated into corten cradle. Information sign to have 2" square corten steel tube frame with WD1 wood paneling infill. Printed graphic on high pressure laminate adhered to aluminum backer fastened to front face of WD1 core. Use black security screws for fastening.

ARTWORK ON THIS PAGE IS FOR VISUAL REPRESENTATION ONLY (FPO). PRODUCTION FILES WILL BE DELIVERED TO VENDORS WHEN PROJECT IS APPROVED FOR FINAL PRODUCTION. ALL DESIGNS & SPECIFICATIONS ARE SOLE PROPERTY OF ZEBRADOG ©2017.
ARTWORK & PRINTED MATERIAL ARE NOT TO BE USED BY ANYONE WITHOUT THE CONSENT OF ZEBRADOG • 1249 WILLIAMSON ST. • MADISON, WI 53703 • 608.257.8400

DESIGN DETAIL

17-WDE-003

CLIENT: CITY OF WISCONSIN DELLS
DESCRIPTION: ILLINOIS AVE ANCHOR EXHIBIT

ZEBRADOG
DYNAMIC ENVIRONMENT DESIGN

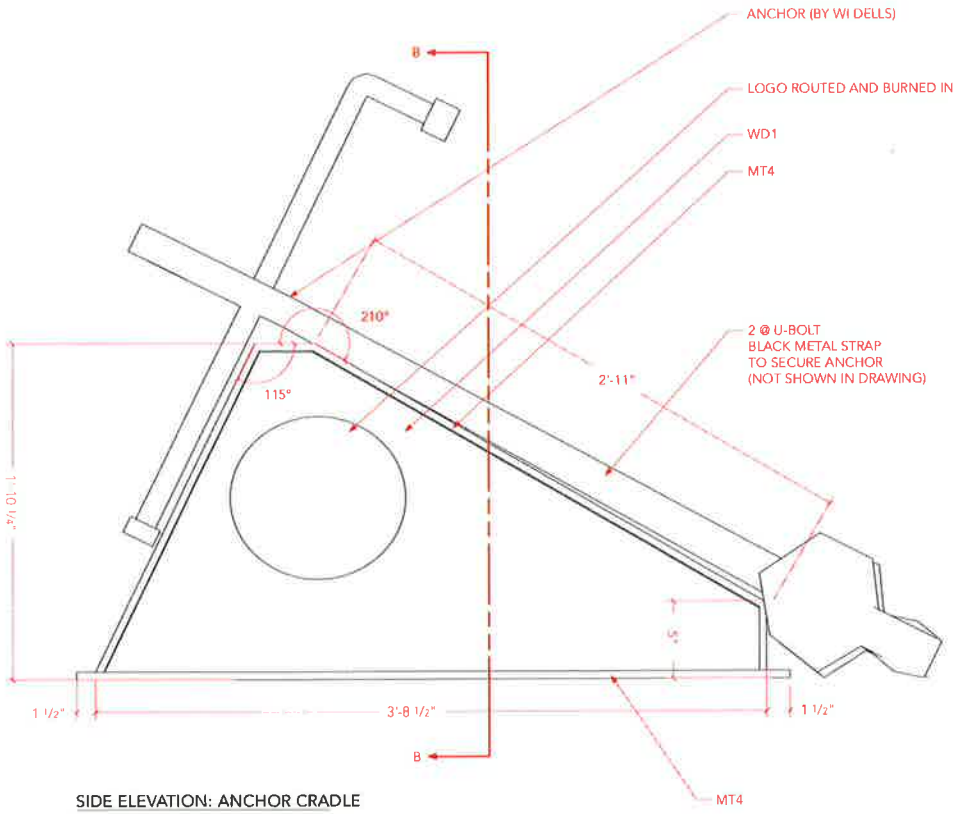

SIDE ELEVATION: ANCHOR CRADLE
1 1/2" = 1'-0" 0" 8"

JOB SPECS

LANDSCAPE ARCHITECT

Anchor Exhibit
Qty: 1
Final Size: 5'-10"W x 4'-9"D x 1'-10"H

Construct a platform consistent with existing barrier walls installed at Cafe Zones. 3" Thick concrete cap. Base of wall to be finished with stone veneer to match existing Cafe Zones.

Well in cap to receive grazing LED well uplight continuous in front of sign. Use warm white LEDs. Diffuse well light with frosted polycarbonate. Wells finish flush with concrete cap with trims painted brown to match corten steel. Consider drainage and environmental factors when detailing wells, light, and trims.

Anchor Cradle and signage details next page. Anchor cradle to be MT4 with WD1 infill on sides. WD1 recessed back 1/2" from edge of MT4. Logos routed and burned into WD1. Lag screw cradle to concrete cap with epoxy. Two metal straps (U-bolts painted black) to secure anchor to cradle. Anchor by WI Dells. Well light integrated into corten cradle to uplight information sign. Use warm white LEDs. Diffuse well light with frosted polycarbonate. Consider drainage and environmental factors when detailing.

Information sign integrated into corten cradle. Information sign to have 2" square corten steel tube frame with WD1 wood paneling infill. Printed graphic on high pressure laminate adhered to aluminum backer fastened to front face of WD1 core. Use black security screws for fastening.

ARTWORK ON THIS PAGE IS FOR VISUAL REPRESENTATION ONLY (FPO). PRODUCTION FILES WILL BE DELIVERED TO VENDORS WHEN PROJECT IS APPROVED FOR FINAL PRODUCTION. ALL DESIGNS & SPECIFICATIONS ARE SOLE PROPERTY OF ZEBRADOG ©2017.
ARTWORK & PRINTED MATERIAL ARE NOT TO BE USED BY ANYONE WITHOUT THE CONSENT OF ZEBRADOG • 1249 WILLIAMSON ST. • MADISON, WI 53703 • 608.257.8400