CITY OF WISCONSIN DELLS MEETING AGENDA

Meeting Description PUBLIC WORKS COMMITTEE
Date: MONDAY, JANUARY 21, 2019 **Time:** 5:00 PM
Location: MUNICIPAL BUILDING 300 LA CROSSE STREET, WISCONSIN DELLS, WI

	Committee Members		
	Ald. Jesse DeFosse-Chair	Ald. Brian Holzem	
	Mayor Ed Wojnicz	Ald. Terry Marshall	

AGENDA ITEMS:	
1	CALL MEETING TO ORDER AND ATTENDANCE
2	APPROVAL OF THE MINUTES FROM THE DECEMBER 10, 2018 PUBLIC WORKS MEETING
3	DISCUSSION/DECISION ON STREET LIGHTING ON THE KILBOURN BRIDGE
4	DISCUSSION/DECISION ON TRANSFER OF CUSTOMERS SERVED BY WISCONSIN POWER AND LIGHT COMPANY TO THE CITY OF WISCONSIN DELLS, SAUK COUNTY (AREA F ON THE ATTACHED MAP)
5	DISCUSSION/UPDATES ON CURRENT PROJECTS: ➢ WisDOT/STH 13 OVERLAY (COUNTY LINE NORTH TO GOLDEN AVENUE) ➢ WISCONSIN DELLS HIGH SCHOOL PROJECT ➢ SUPERIOR/LA CROSSE STREET
6	ANY OTHER ITEMS FOR REFERRAL TO A FUTURE MEETING
7	FUTURE PUBLIC WORKS MEETING (MONDAY, FEBRUARY 11, 2019 @ 5:00PM)
8	ADJOURNMENT
	Open Meetings Notice: If this meeting is attended by one or more members of the Common Council who are not members of this committee, their attendance may create a quorum of another city commission, board or committee under the Wisconsin Open Meetings Law; However, no formal action will be taken by any governmental body at the above stated meeting other than the body, committee, commission, or board identified in this meeting notice. Please be advised that upon reasonable notice, the City of Wisconsin Dells will furnish appropriate auxiliary aids and services to afford individuals with disabilities an equal opportunity to participate in meeting activities.
	ALDERPERSON JESSE DEFOSSE, CHAIRPERSON DISTRIBUTED JANUARY 18, 2019

PUBLIC WORKS COMMITTEE
CITY OF WISCONSIN DELLS
MUNICIPAL BUILDING-300 LA CROSSE STREET
DECEMBER 10, 2018

Chairperson DeFosse called the meeting to order at 5:00 PM. Notice of the meeting was provided to the Dells Events, WNNO Radio, and posted in accordance with State Statutes.

1. Present: Mayor Ed Wojnicz, Ald. Jesse DeFosse and Ald. Terry Marshall

   Absent: Ald. Brian Holzem

   Others: Public Works Director David W. Holzem, City Planner/Zoning Administrator Chris Tollaksen, Asst. City Atty. Joseph Hasler, DPW Office Clerk Monica Dorow-Leis, City Clerk Nancy Holzem, Ald. Freel, Ald. Anderson, Fire Chief Pat Gavinski, Ald. Anchor, Phil Helley, Ted Theiler, Scott Walsh, and Chris Jardine from the Dells Events

2. Motion by Ald. Marshall and seconded by Mayor Wojnicz approve the minutes of the November 13, 2018 meeting. Motion carried.

3. Chula Vista is working with their engineering firm redesigning the plans, where they may not need to vacate a portion of River Road near Chula Vista. They ran into potential conflicts with electric and other utilities. They will come before the city if they need to request this vacation in the future. This item was updated information only.

4. A petition to vacate Shady Lane, which is needed to start the process of vacating, has not been received. This item was updated information only.

5. David Holzem said he received plans for the water tower in the Business Park on Hwy 23. MSA Professional Services, Inc. (MSA) is reviewing the structural analysis in regards to the modifications requested by AT&T, including construction of a pod (an extension of the dry riser tube). Additional base anchors will be necessary. If the structural analysis is approved by MSA, they will proceed with the project. There will be minimal cost, if any, to the city. This item was information only.

6. David Holzem said they have a meeting tomorrow with Architectural Design Consultants, Inc and the Wisconsin Dells School District, where they will be discussing the status of the utilities. There are concerns with the preliminary cost estimates related to road improvements. A Traffic Impact Analysis (TIA) will be necessary to assess access to Hwy 12, if they go that route. Kevin Ruhland of MSA will be doing the TIA. This item was information only.

7. David said they are hoping by the end of the week to have information on round-a-bout sizing and relocation information for the Superior/La Crosse Street Project. This is one of the last steps for the project, unless the plan dramatically changes near the USPS. This item was information only.

8. There were no items for referral.

9. Next meeting is scheduled for Monday, January 14, 2019 at 5:00pm.

10. Motion by Ald. Marshall and seconded by Ald. DeFosse to adjourn. Motion carried and the meeting adjourned at 5:14 pm.

Monica Dorow-Leis
Public Works Office Clerk

$300/400 (Std. LED)

dells (Reference=L64130-1) ≅ 100

Decor. (HPS) - $1400. - (400w) (Dome) (2000kw/Annually) ≅ 1700/ fixture (LED) (Complete)

LEDGINE

ITEM 3

Bridge (180 w)

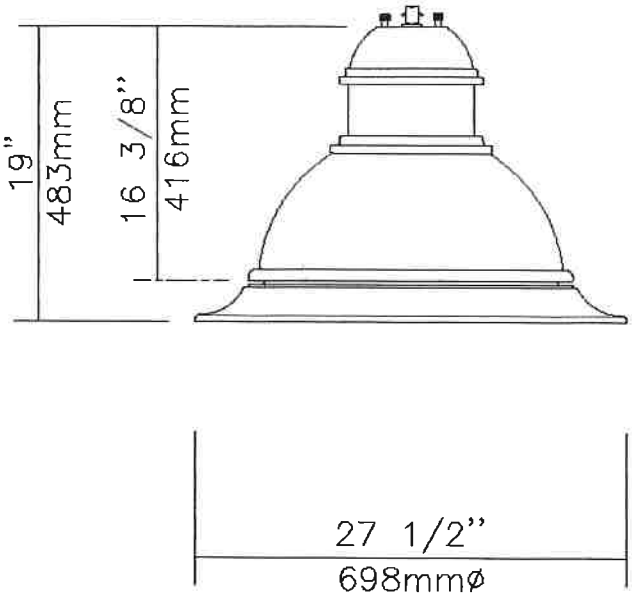

EPA: 1.42 sq ft / weight: 42 lb (19.1 kg)
Note: 3D image may not represent color or option selected.
Logos above include link, click to access.

Qty	1	Luminaire	**DMS50-180W80LED4K-T-LE3F-240-DMG-BKTX**

Description of Components:

Hood: A die cast A360.1 aluminum dome complete with a cast-in technical ring with latch and hinge. The mechanism shall offer tool-free access to the inside of the luminaire. An embedded memory-retentive gasket shall ensure weatherproofing.

Housing: In a round shape, this housing is made of cast 356 aluminum, c/w a watertight grommet, mechanically assembled to the bracket with four bolts 3/8-16 UNC. This suspension system permits for a full rotation of the luminaire in 90 degree increments.

Light Engine: LEDgine composed of 5 main components: **Heat Sink / Lens / LED Module / Optical System / Driver** Electrical components are RoHS compliant.

Heat Sink: Heat Sink: Made of die cast A360 aluminum optimising the LEDs efficiency and life, complete with a cast in skirt and technical ring. Product does not use any cooling device with moving parts (only passive cooling device)

Lens: Made of soda-lime clear tempered flat glass lens, mechanically assembled and sealed onto the lower part of the heat sink.

LED Module: LED type Philips Lumileds LUXEON T. Composed of 80 high-performance white LEDs. Color temperature as per ANSI/NEMA bin Neutral White, 4000 Kelvin nominal (3985K +/- 275K or 3710K to 4260K), CRI 70 Min. 75 Typical.

Optical System: (LE3F), IES type III (asymmetrical). Composed of high-performance optical grade PMMA acrylic refractor lenses to achieve desired distribution optimized to get maximum spacing, target lumens and a superior lighting uniformity. Optical system is rated IP66. Performance shall be tested per LM-63, LM-79 and TM-15 (IESNA) certifying its photometric performance. Street side indicated.0% uplight and U0 per IESNA TM-15.

PHILIPS

Click here for the Philips Luminaires Portfolio eCatalog

Philips is harnessing the power of our brands to provide you with the lighting solutions of tomorrow.

To help in your selection process, we are making our product information easier to access. At the end of November 2013, all product information will be in one, easy to use Philips Luminaires Portfolio eCatalog.
Click Here to Learn More

PHILIPS

PHILIPS LUMEC

Domus Series - Outdoor Lighting

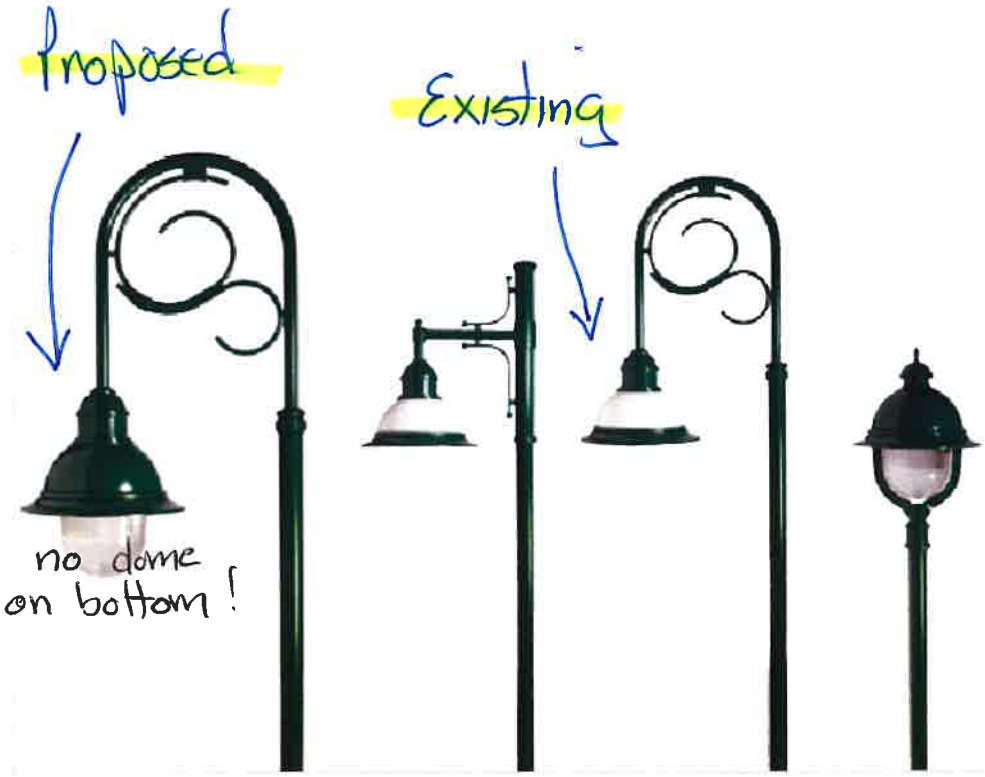

Some luminaires of this series are IDA approved.

DMS50-SHA-NM

Harmonizing beautifully with virtually any urban setting, the Domus series luminaires are representative of the new generation of lighting units. They incorporate a Sealsafe sealed optical chamber. The absence of external prisms makes the refractor and lens surface self-cleaning, minimizing the deterioration of the optical system.

Technical Information

For more information, please download the Technical Specifications below.

3D | Create your own 3D luminaire assembly

ITEM 4

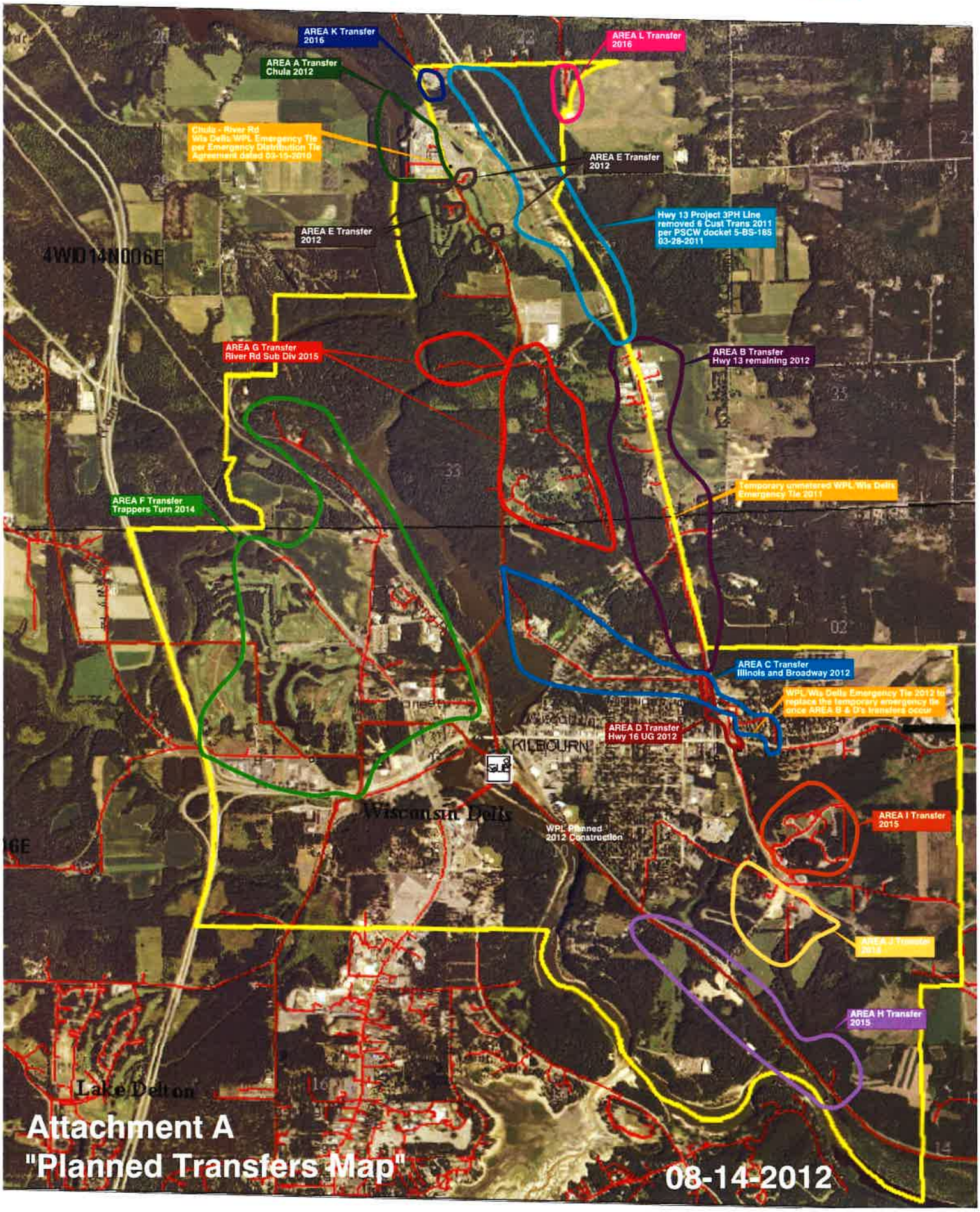
AREA K Transfer 2016
AREA L Transfer 2016
AREA A Transfer Chula 2012
Chula - River Rd Wis Delts WPL Emergency Tie per Emergency Distribution Tie Agreement dated 03-15-2010
AREA E Transfer 2012
AREA E Transfer 2012
Hwy 13 Project 3PH Line removed 6 Cust Trans 2011 per PSCW docket 5-BS-185 03-28-2011
4WD14N006E
AREA G Transfer River Rd Sub Div 2015
AREA B Transfer Hwy 13 remaining 2012
Temporary unmetered WPL/Wis Delts Emergency Tie 2011
AREA F Transfer Trappers Turn 2014
AREA C Transfer Illinois and Broadway 2012
WPL/Wis Delts Emergency Tie 2012 to replace the temporary emergency tie once AREA B & D's transfers occur
AREA D Transfer Hwy 16 UG 2012
KILBOURN
Wisconsin Dells
WPL Planned 2012 Construction
AREA I Transfer 2015
AREA J Transfer 2015
AREA H Transfer 2015
Lake Delton
Attachment A
"Planned Transfers Map"
08-14-2012

2014 Estimates

A) Purchase Alliant facilities on northwest side (Transfer Area F)

a1) Purchase Alliant facilities	$97,467
a2) Construct all tie feeders to allow connection to system	$5,000

2014 Total	**$102,467**

CDR Map

ITEM 5

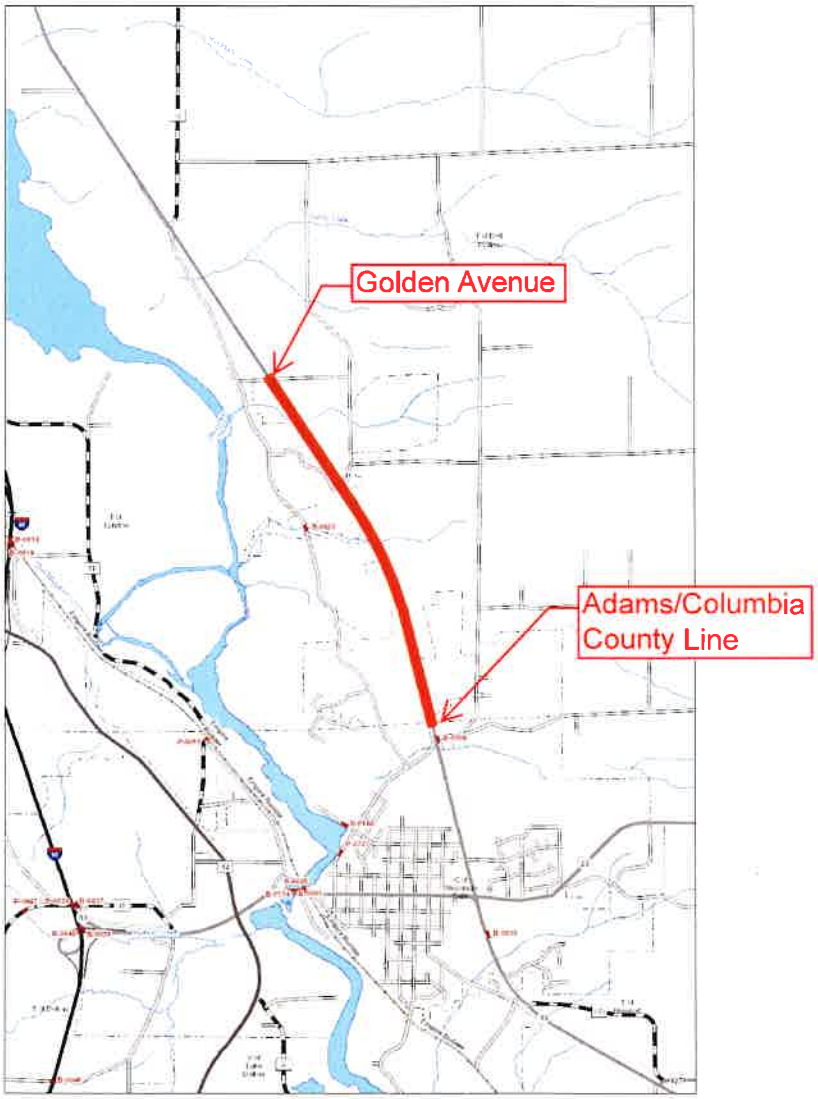

Tentative Schedule/Benchmarks

1. Final PS&E Preparation: Thursday, January 17 through Thursday February 14
2. Ad for Bid to Local Paper for Class 2 Notice: Thursday, February 14
3. 90% Plan Review with City Staff/Utility Department Heads: Friday, February 15
4. Bid Documents Complete: Friday, February 22
5. Bid Letting: Thursday, March 7
6. Present Bid Results and Recommendation of Award to Public Works Comm.: Monday, March 11
7. Present Bid Results and Recommendation of Award to Council: Monday, March 18
8. Execute Contract Documents/Shop Drawing Approvals: March 19 thru April 5

---

9. **Begin Stage 1 Work,** Broadway through Washington Int. (weather permitting): Monday, April 8
10. Complete Stage 1 Work: Friday, June 7
11. **Begin Stage 2 Work**, Washington to Oak including Roundabout: Monday, June 10
12. Complete Stage 2 Work: Friday, August 2
13. **Begin Stage 3 Work,** Municipal and Fischer's Parking Lots: Monday, August 5
14. Complete Stage 3 Work: Friday, September 27

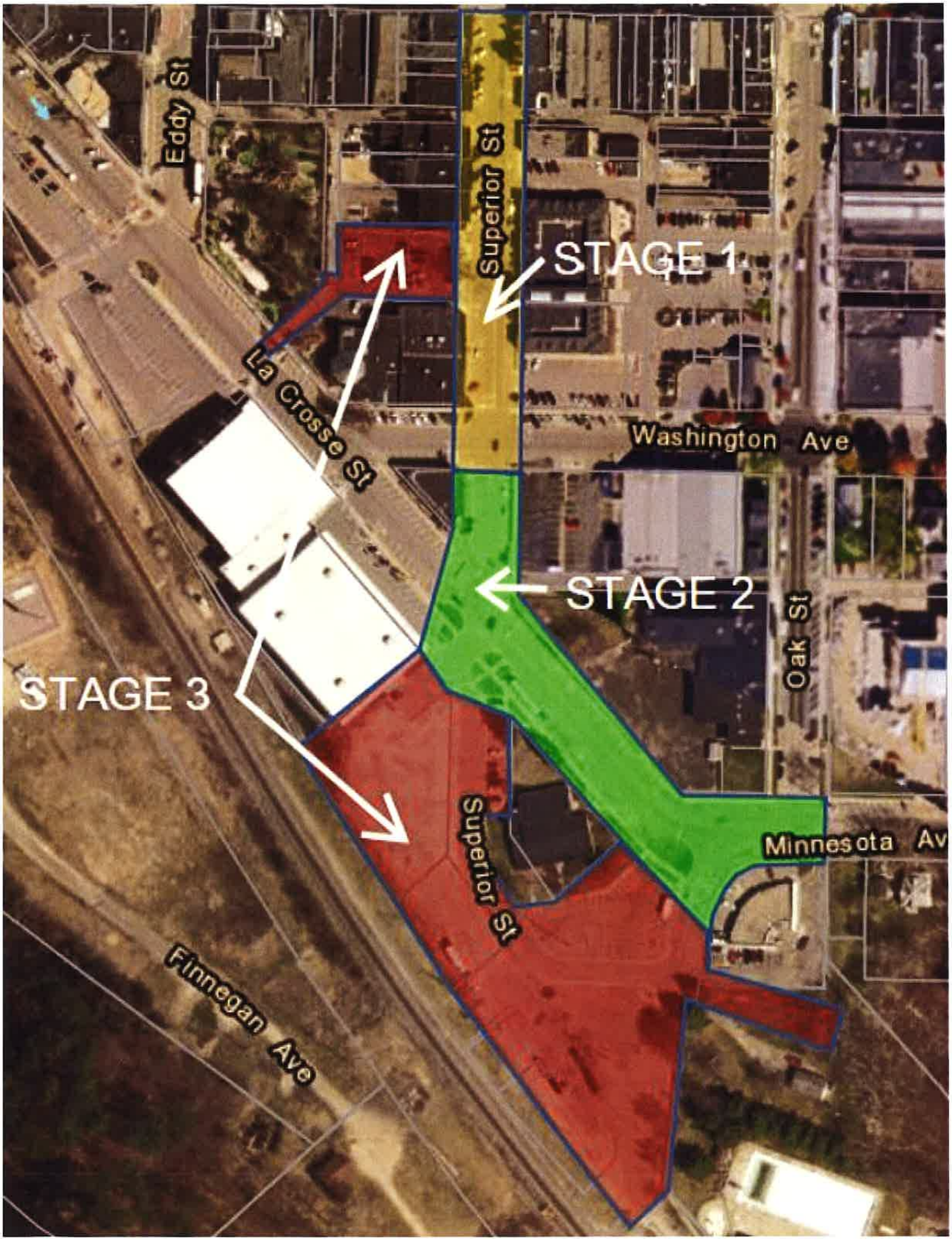
Eddy St
Superior St
STAGE 1
La Crosse St
Washington Ave
STAGE 2
Oak St
STAGE 3
Superior St
Minnesota Av
Finnegan Ave